FIG. 3

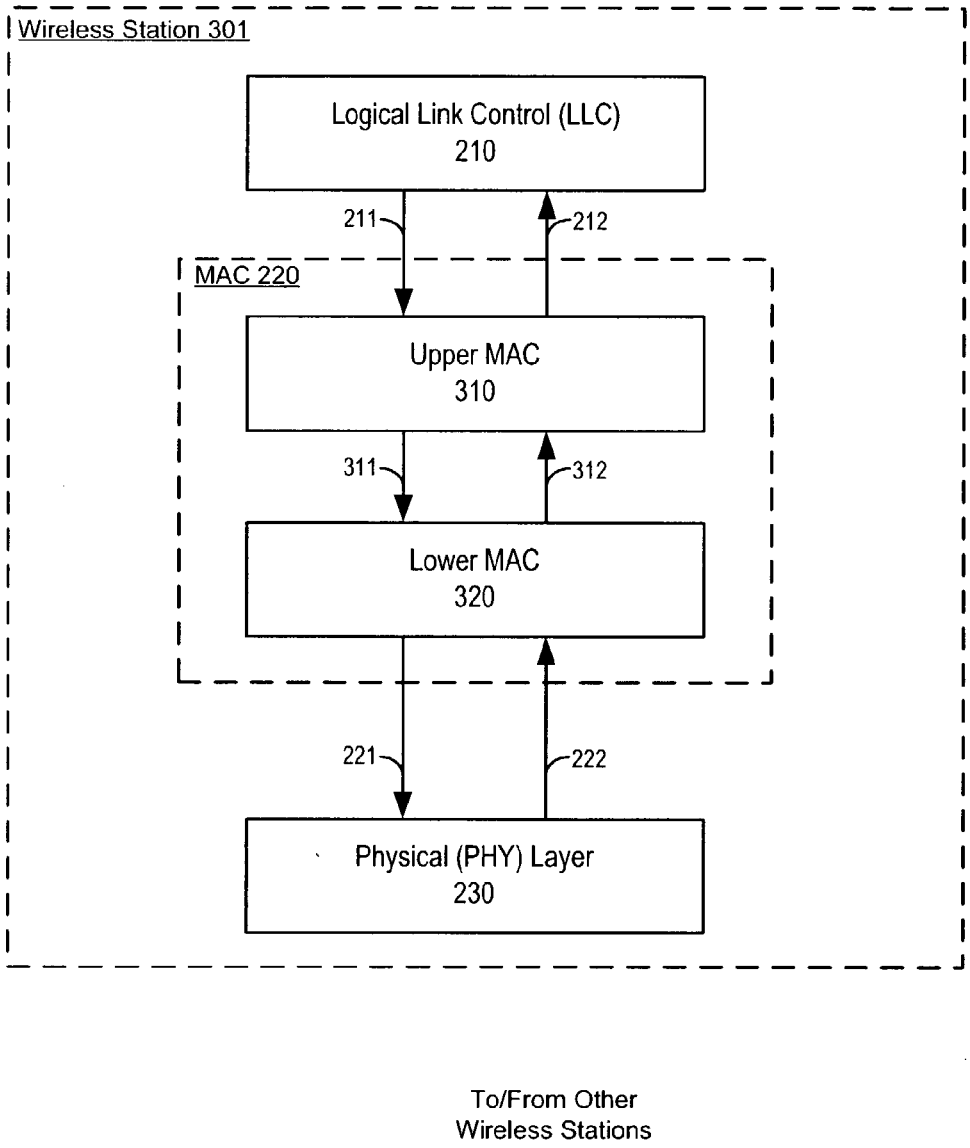
Wireless Station 301
Logical Link Control (LLC)
210
211
212
MAC 220
Upper MAC
310
311
312
Lower MAC
320
221
222
Physical (PHY) Layer
230
To/From Other
Wireless Stations