FIG. 7

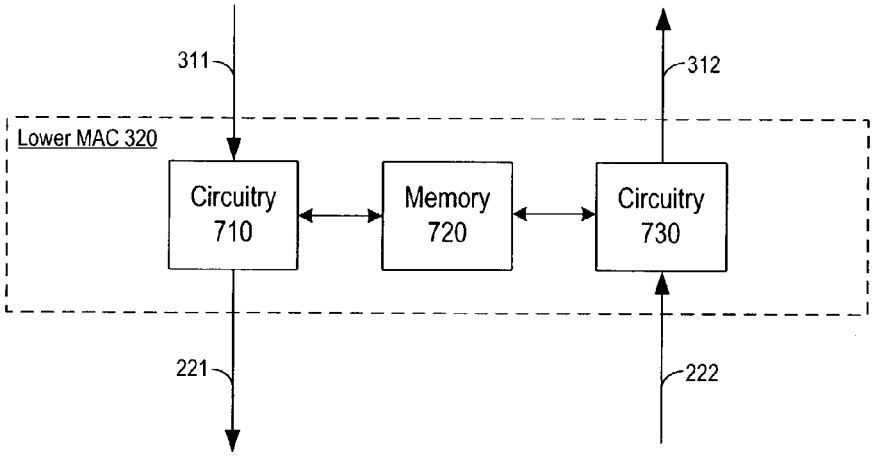
311
312
Lower MAC 320
Circuitry
710
Memory
720
Circuitry
730
221
222