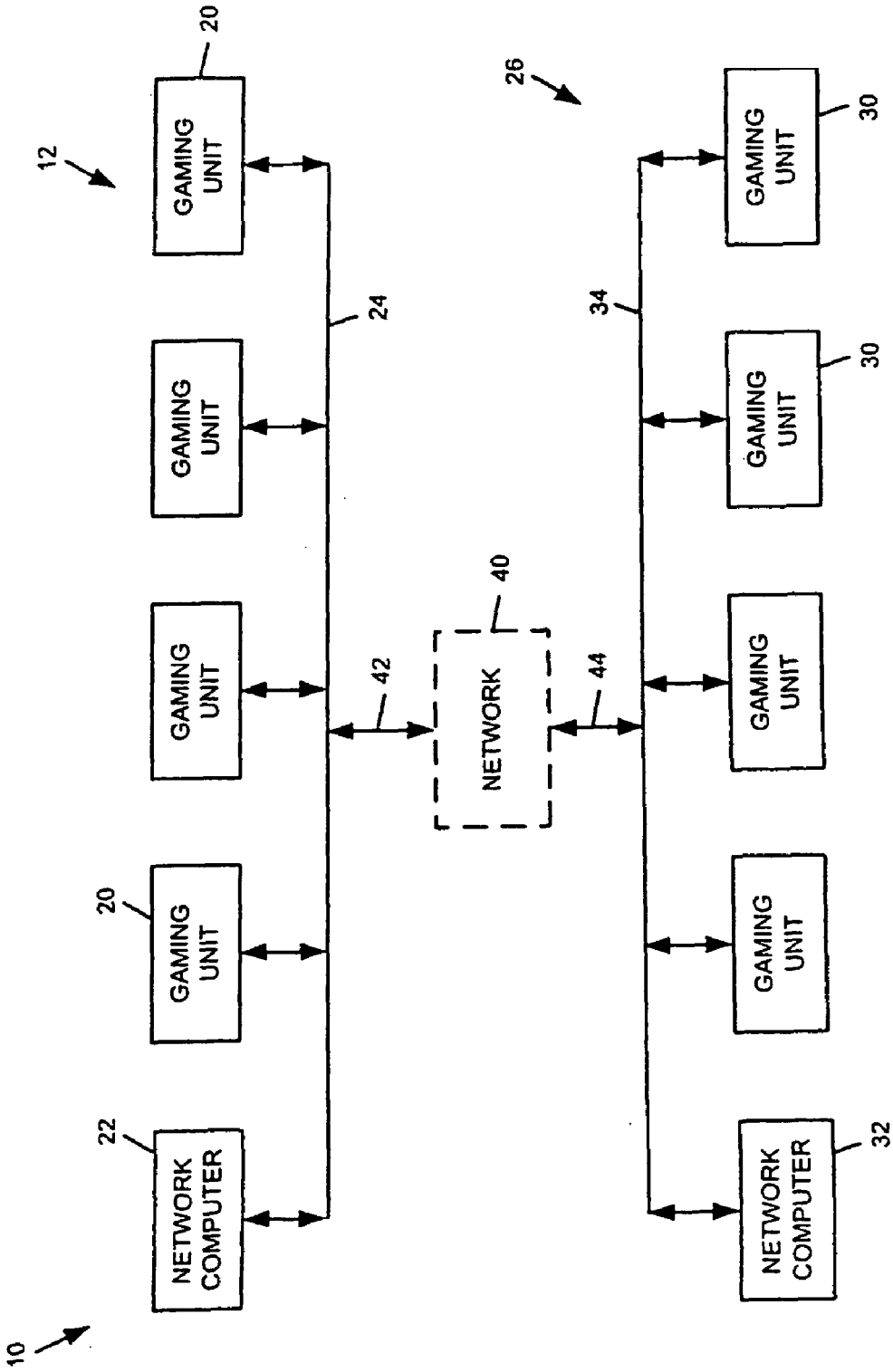
10
12
20
GAMING UNIT
GAMING UNIT
GAMING UNIT
GAMING UNIT
22
NETWORK COMPUTER
24
42
40
NETWORK
44
26
34
GAMING UNIT
GAMING UNIT
GAMING UNIT
GAMING UNIT
NETWORK COMPUTER
30
32

FIG. 1