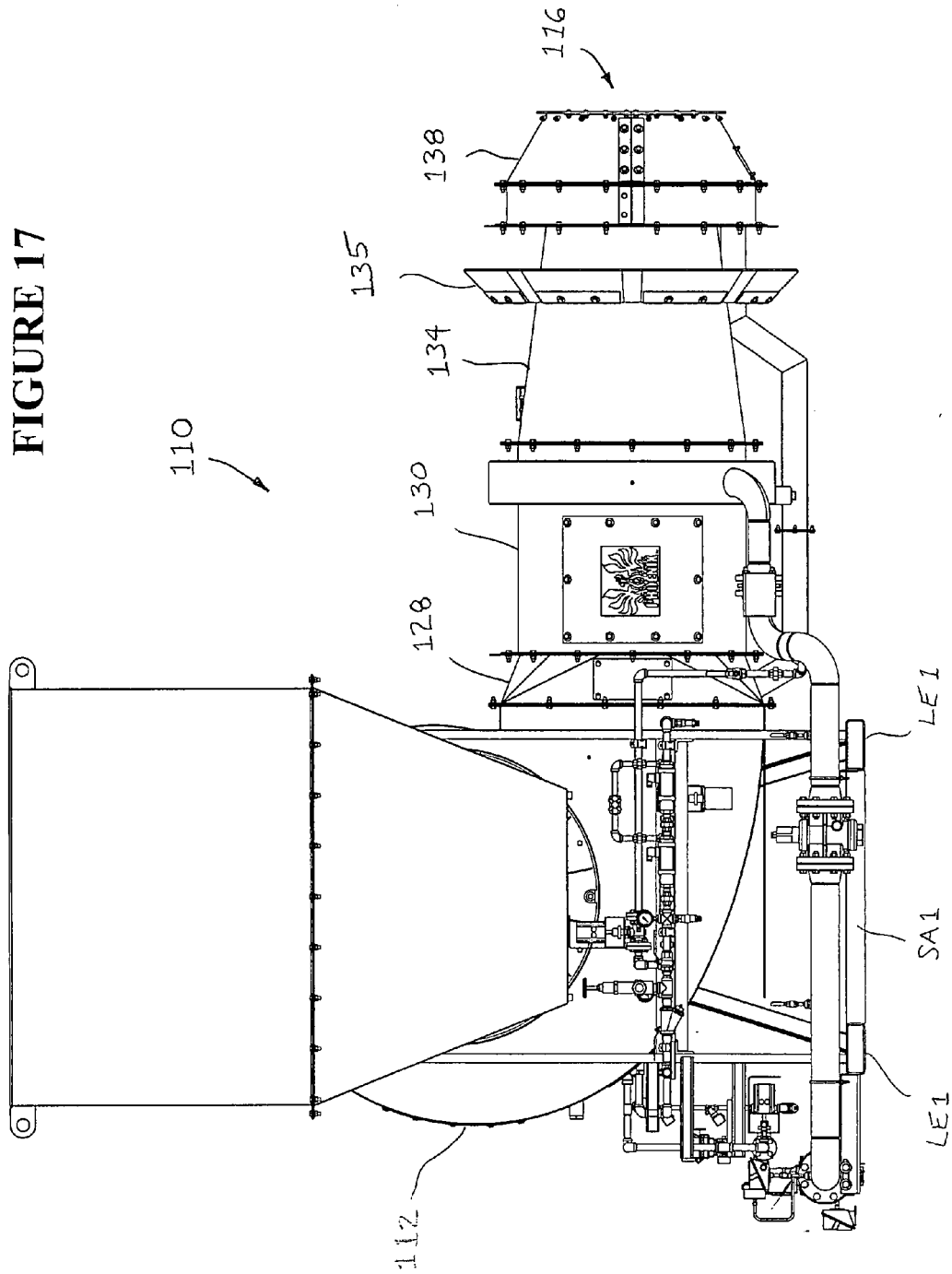FIGURE 17