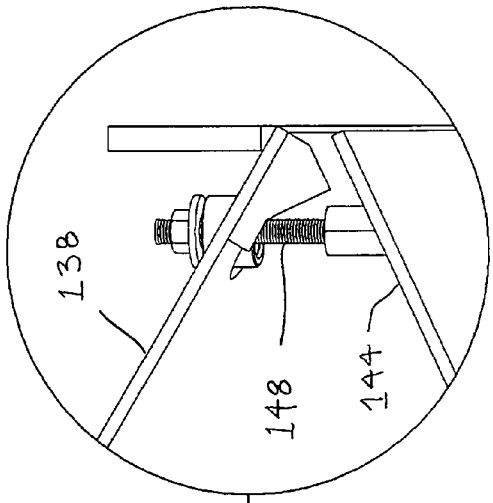

FIGURE 20A

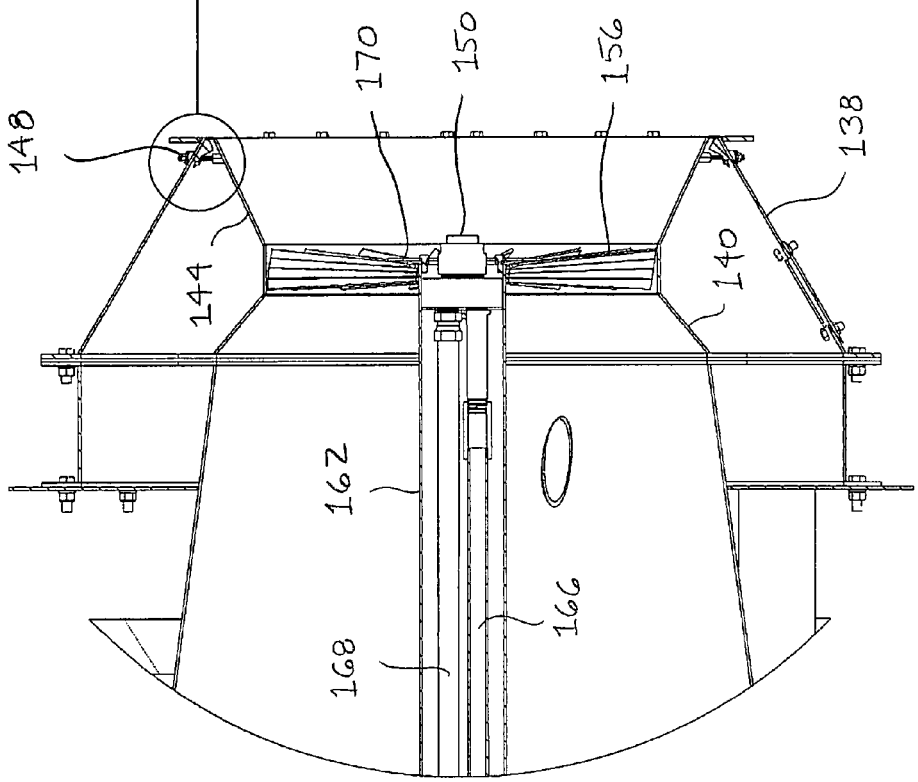

FIGURE 20