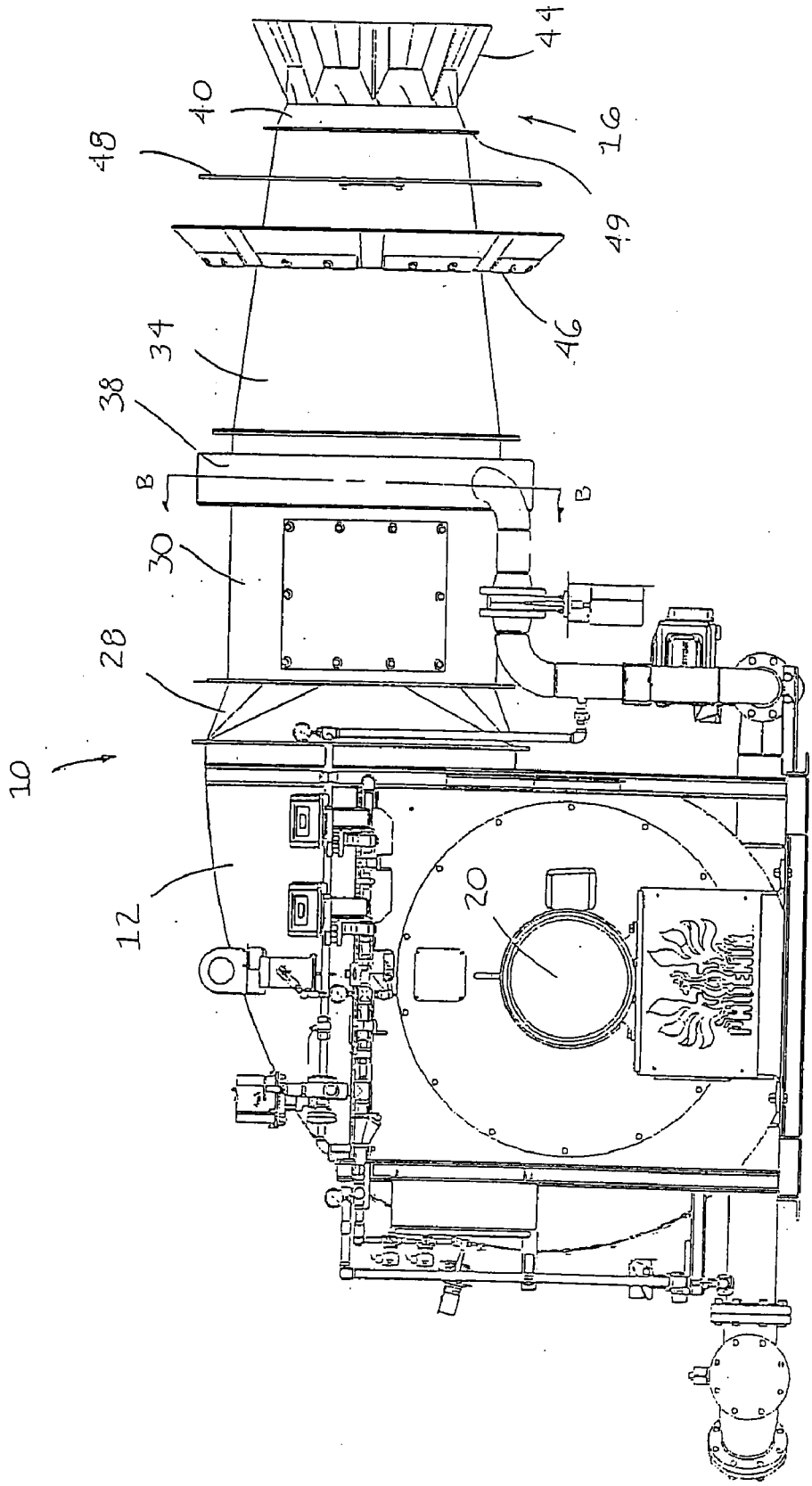

FIGURE 2