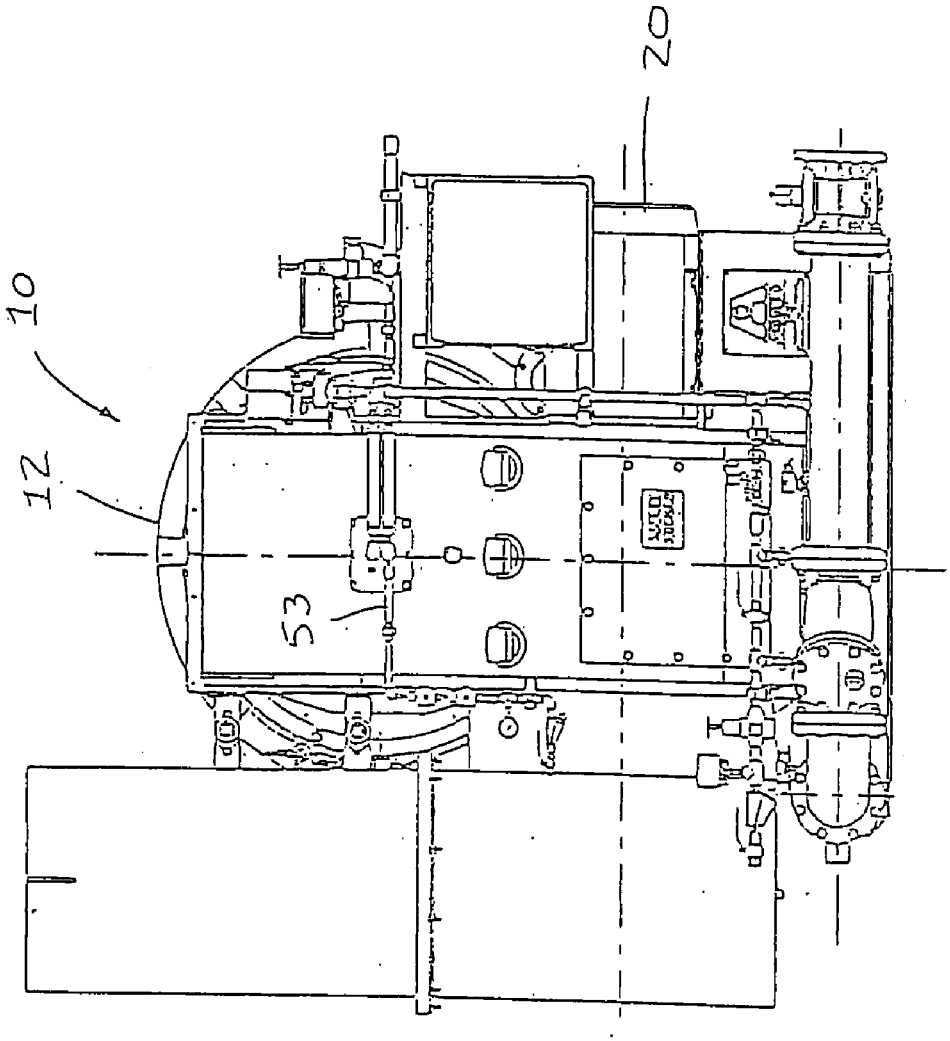

FIGURE 5