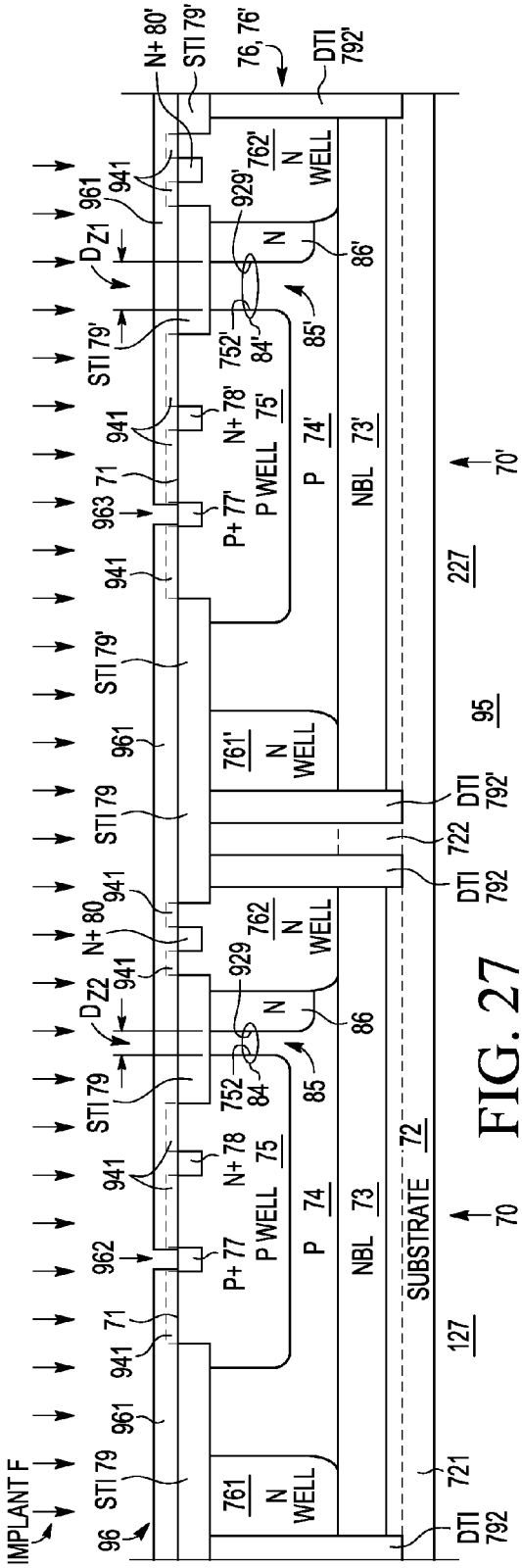
IMPLANT F
96
STI 79
961
941
962
71
963
N+ 80
N+ 80'
STI 79'
76, 76'
DTI 792'
DTI 792
DZ1
DZ2
929
929'
752
752'
84
84'
85
85'
86
86'
762
762'
761
761'
N WELL
N
P WELL
P 74
P 74'
NBL 73
NBL 73'
SUBSTRATE 72
70
70'
721
722
95
127
227
N+ 78
N+ 78'
P+ 77
P+ 77'
75
75'

FIG. 27

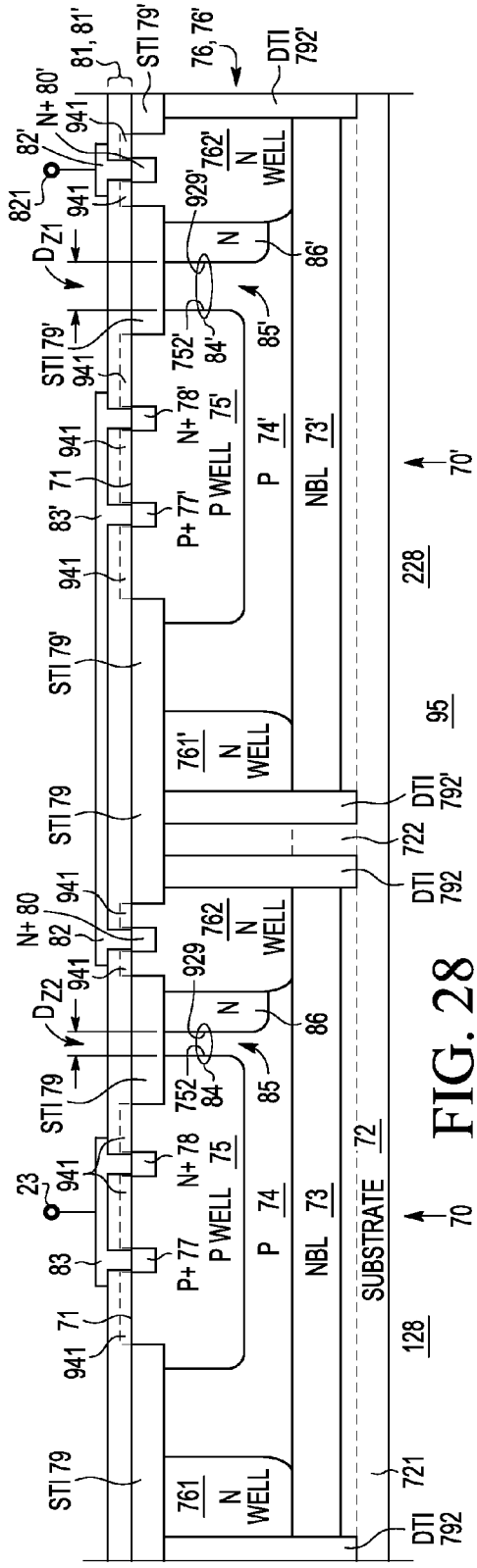
81, 81'
STI 79'
76, 76'
DTI 792'
DTI 792
DZ1
DZ2
N+ 80
N+ 80'
82
82'
821
83
83'
71
941
929
929'
752
752'
84
84'
85
85'
86
86'
762
762'
761
761'
N WELL
N
P WELL
P 74
P 74'
NBL 73
NBL 73'
SUBSTRATE 72
70
70'
721
722
95
128
228
N+ 78
N+ 78'
P+ 77
P+ 77'
75
75'
23

FIG. 28