FIG. 1

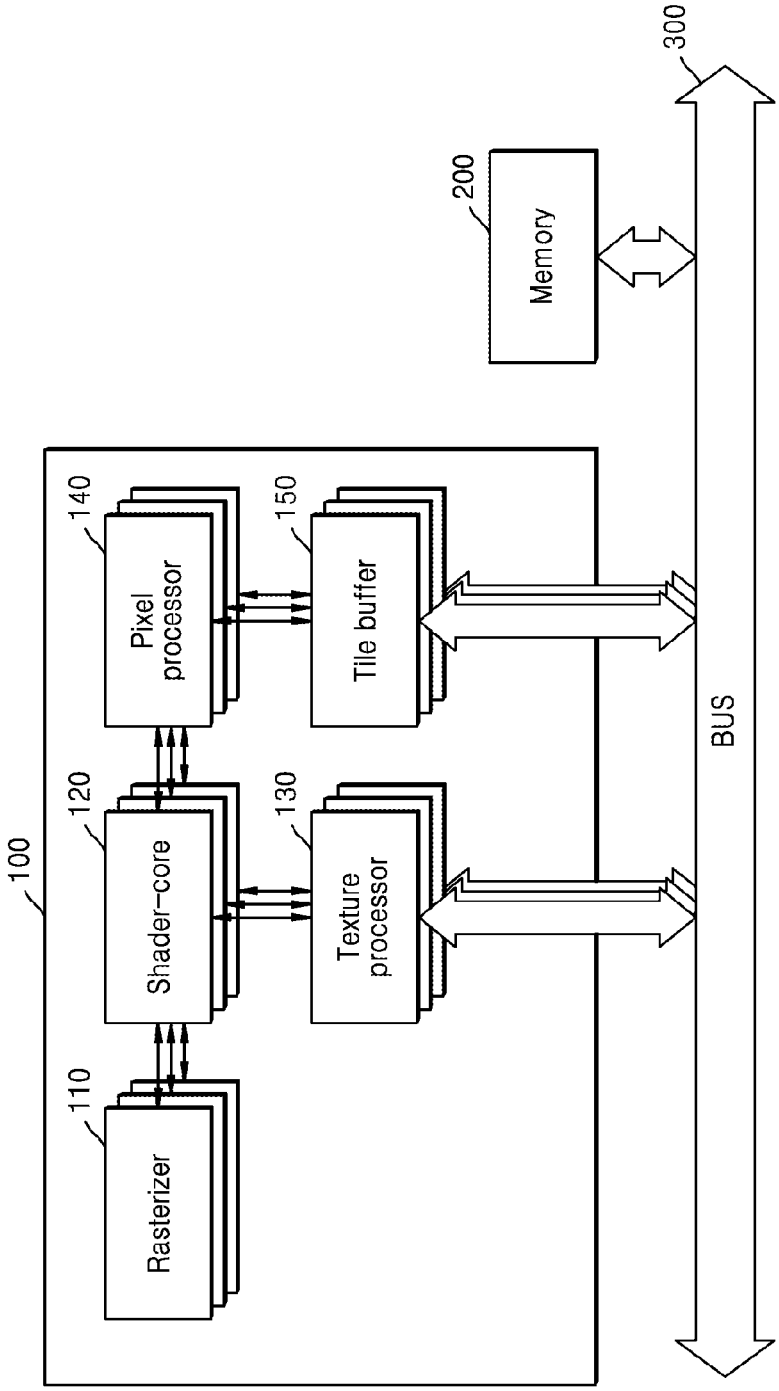
100
110
Rasterizer
120
Shader-core
130
Texture processor
140
Pixel processor
150
Tile buffer
200
Memory
300
BUS