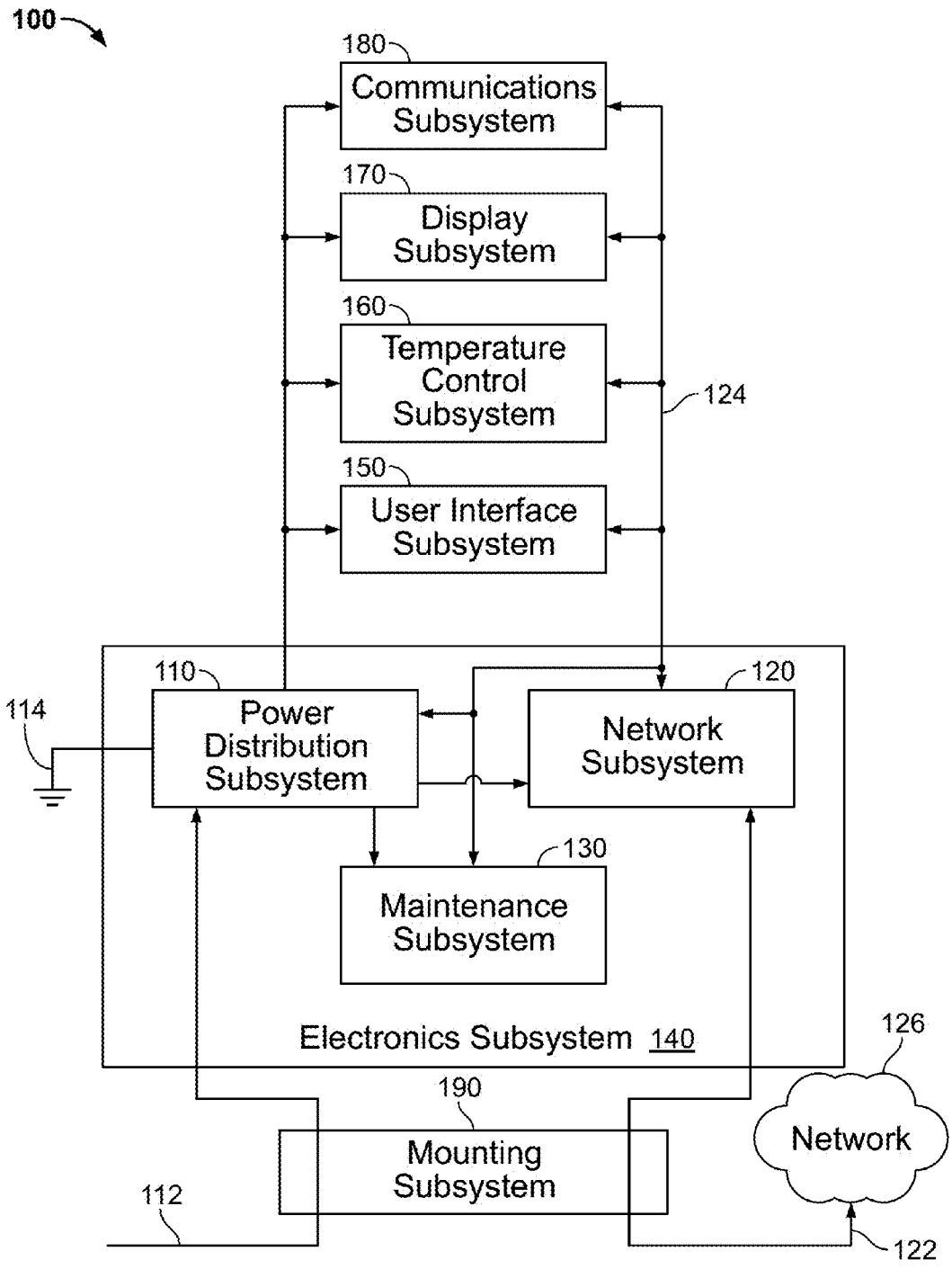
100
180
Communications Subsystem
170
Display Subsystem
160
Temperature Control Subsystem
124
150
User Interface Subsystem
110
Power Distribution Subsystem
114
120
Network Subsystem
130
Maintenance Subsystem
Electronics Subsystem 140
126
190
Mounting Subsystem
Network
112
122

FIG. 1