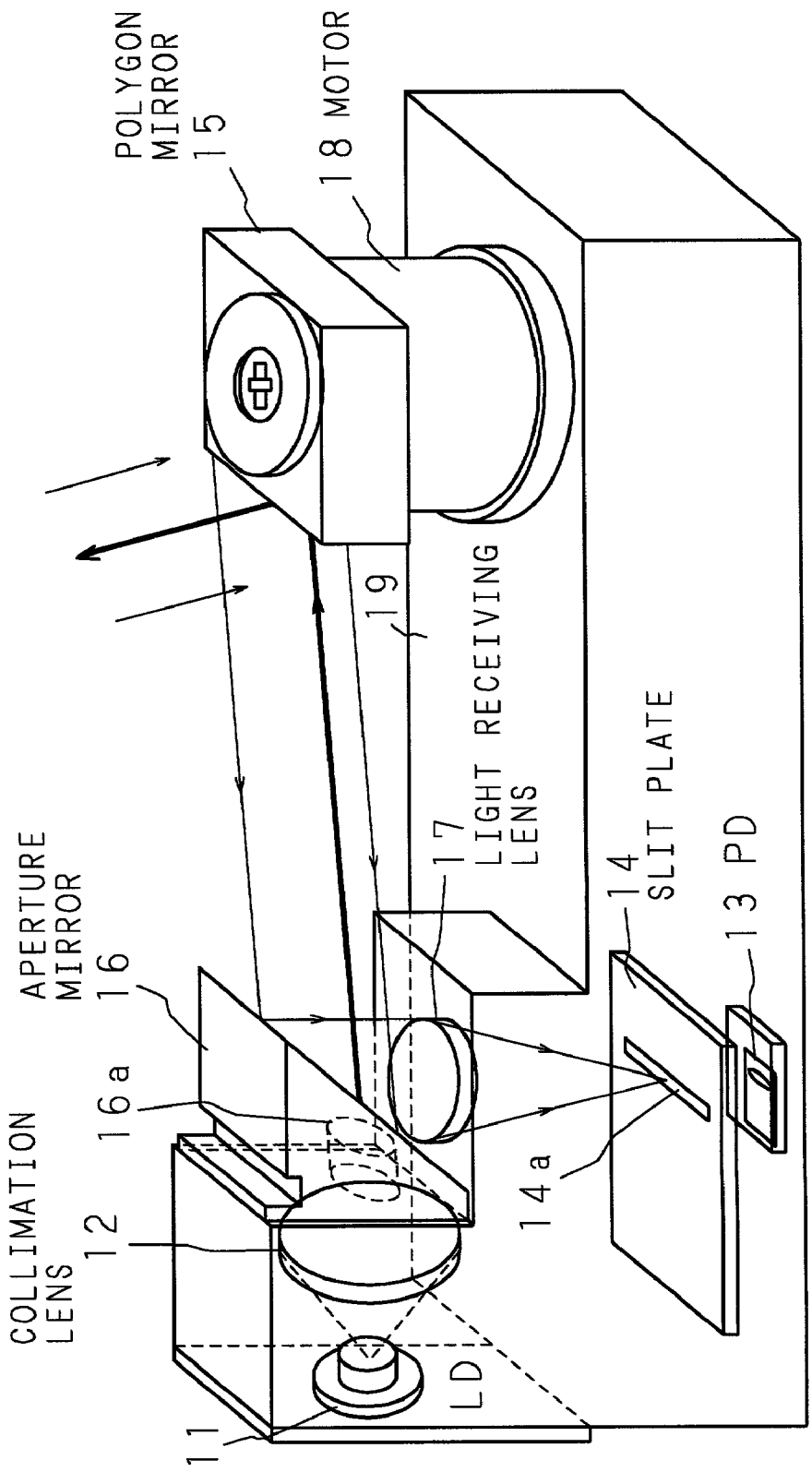
POLYGON MIRROR 15
18 MOTOR
19
LIGHT RECEIVING LENS 17
APERTURE MIRROR 16
16a
COLLIMATION LENS 12
11
LD
14 SLIT PLATE
14a
13 PD

FIG. 2