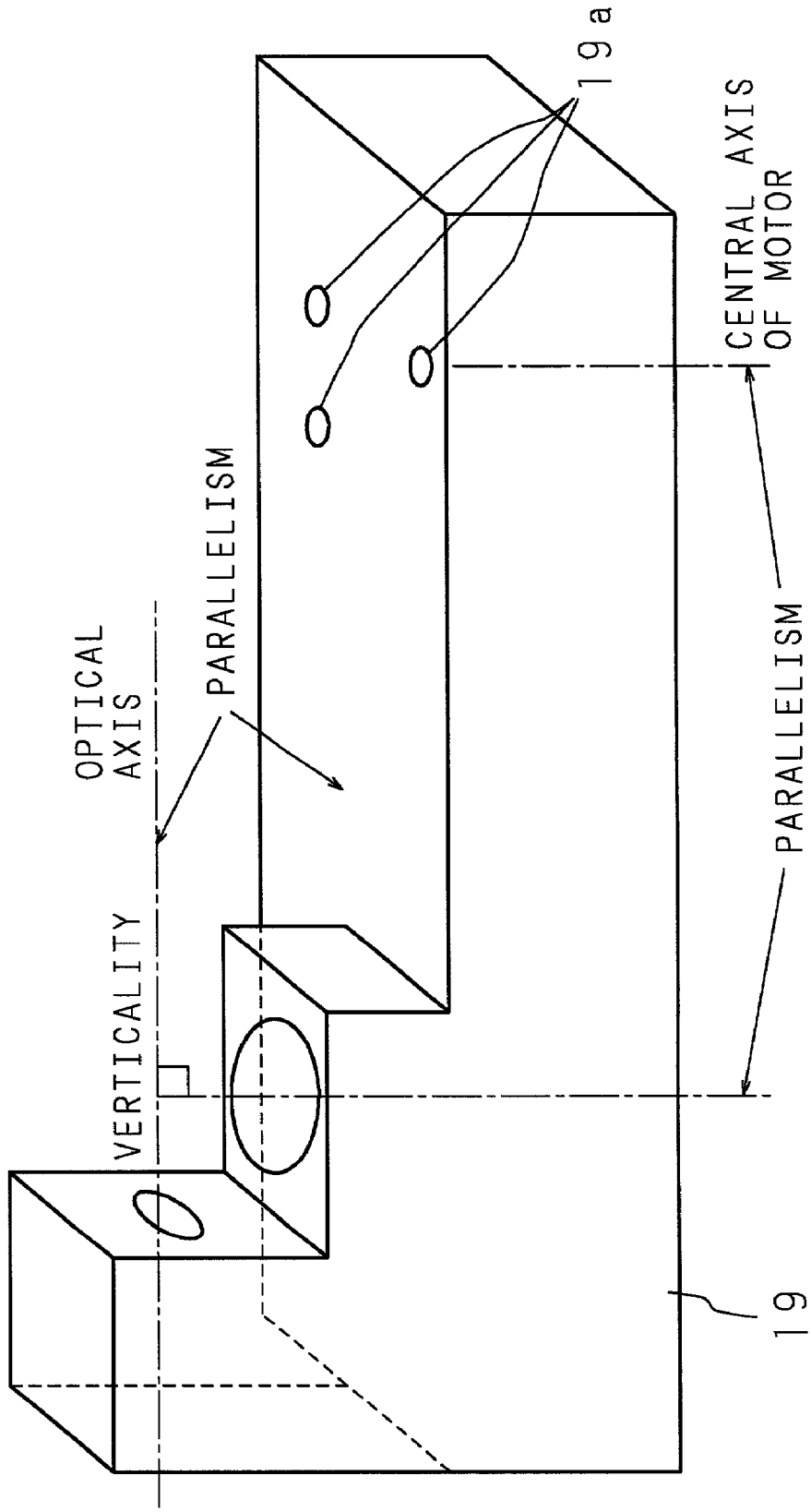
19a
CENTRAL AXIS OF MOTOR
PARALLELISM
OPTICAL AXIS
PARALLELISM
VERTICALITY
19

FIG. 3