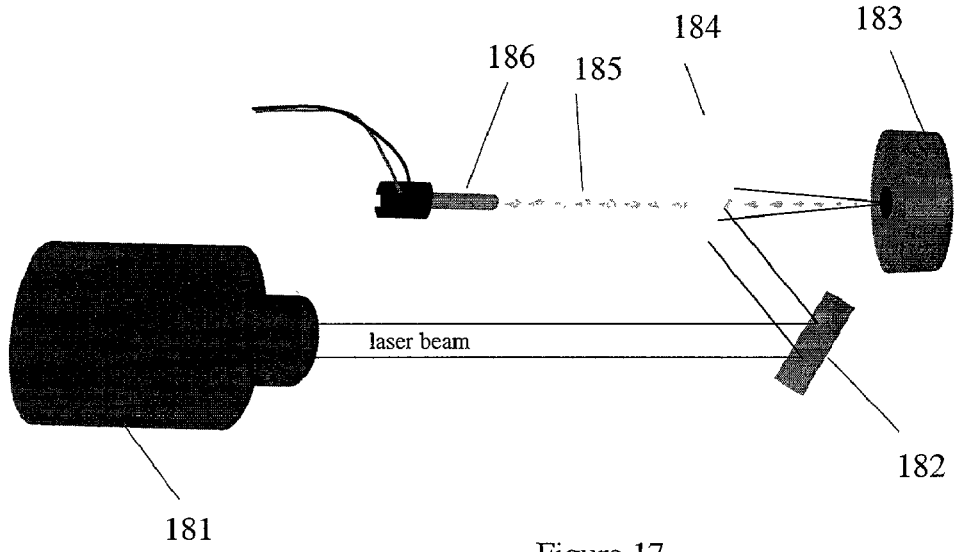

Figure 17

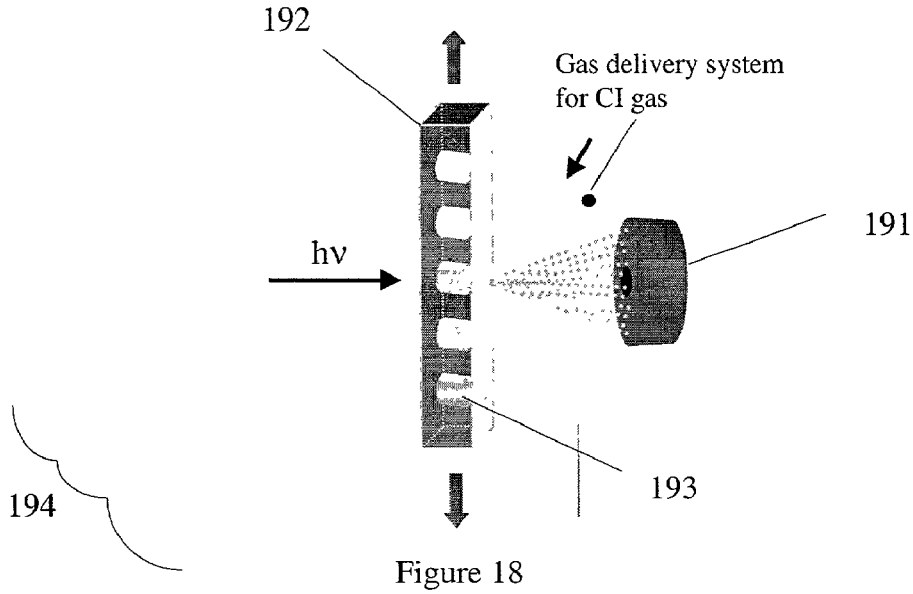

Figure 18