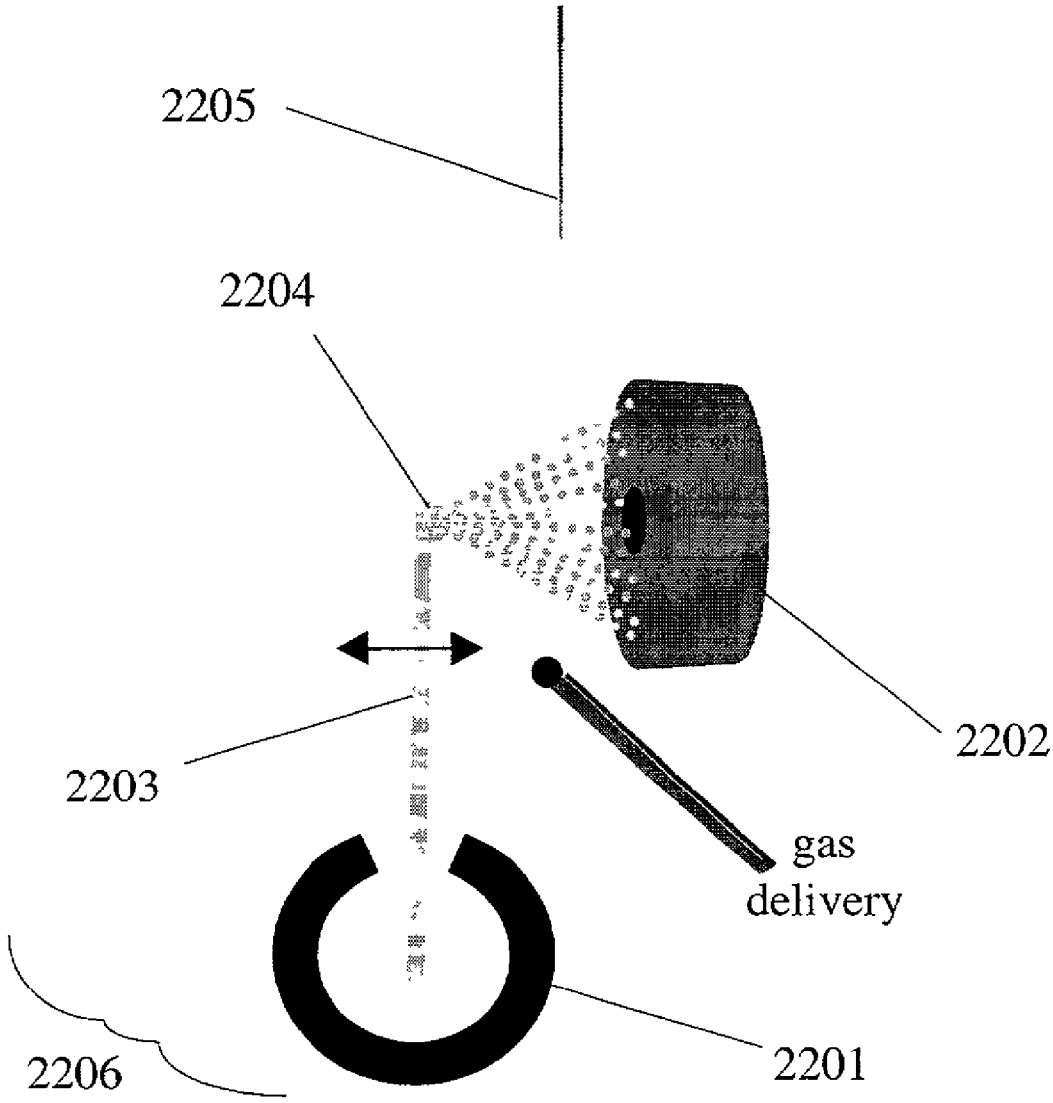

Figure 21