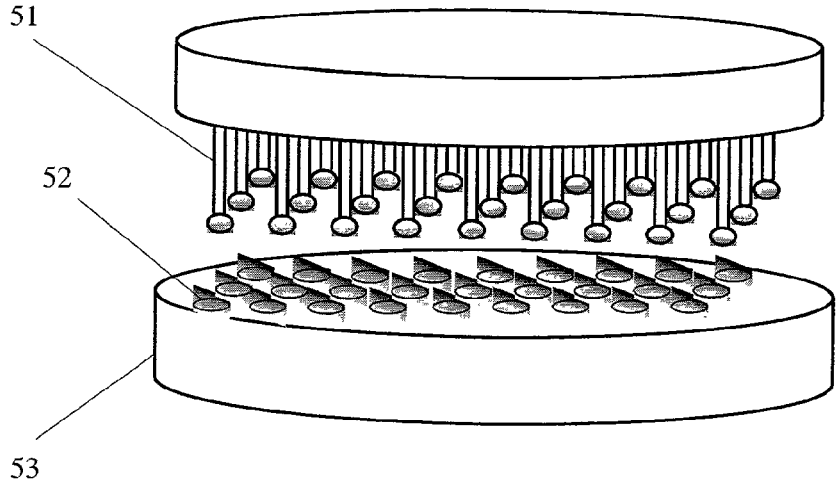

Figure 4

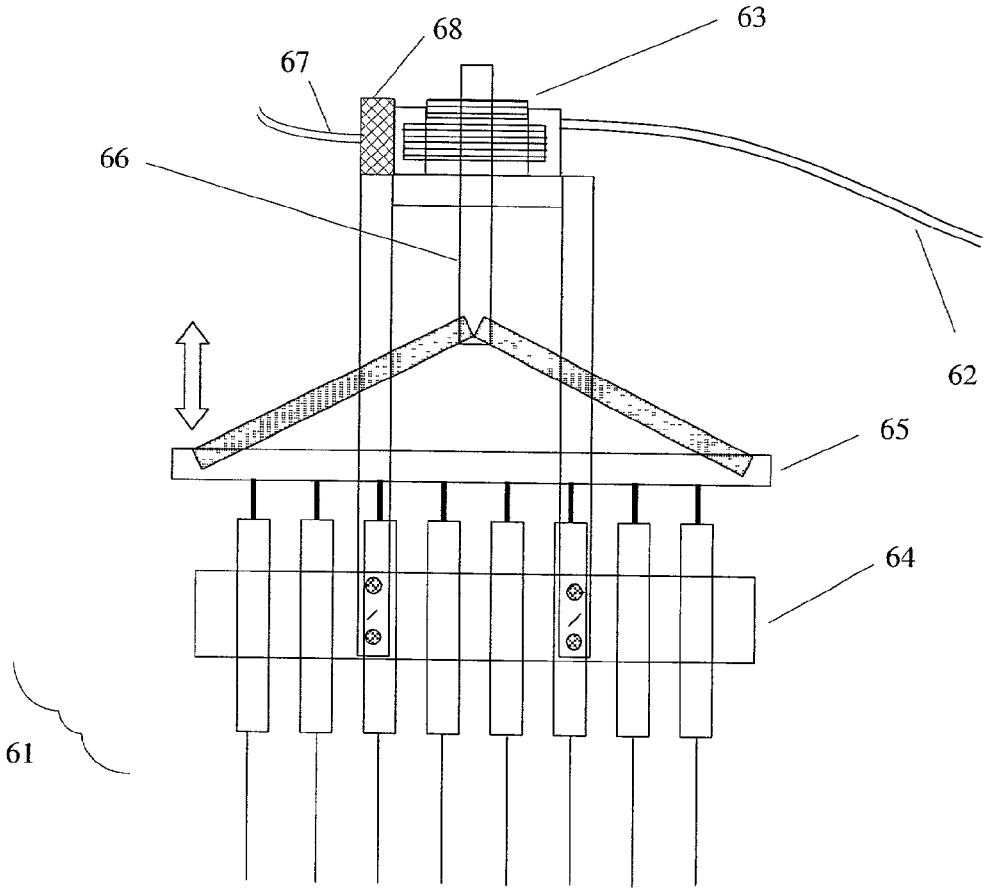

Figure 5