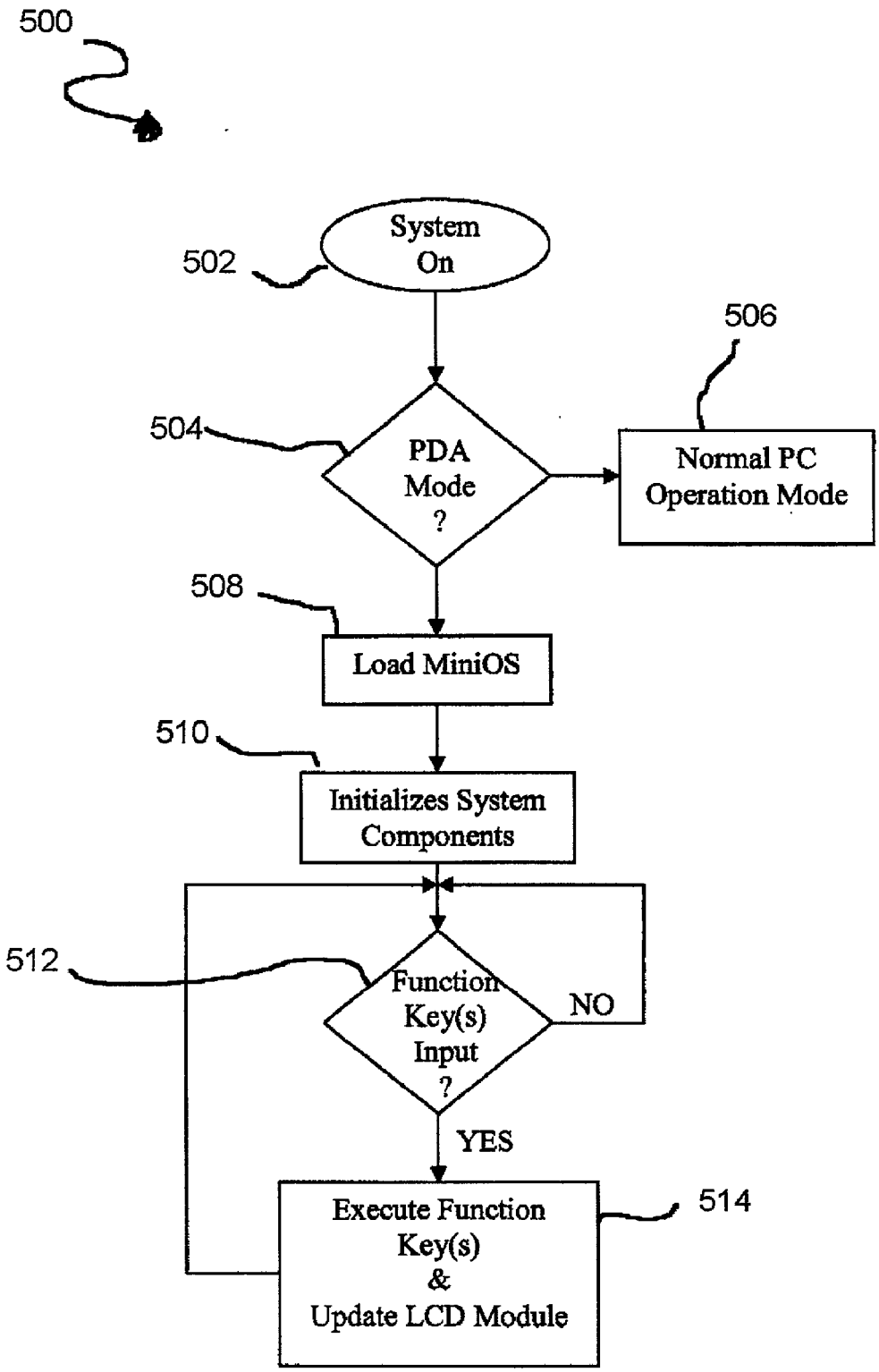
500
502
System On
504
PDA Mode ?
506
Normal PC Operation Mode
508
Load MiniOS
510
Initializes System Components
512
Function Key(s) Input ?
NO
YES
514
Execute Function Key(s) & Update LCD Module

Figure 5