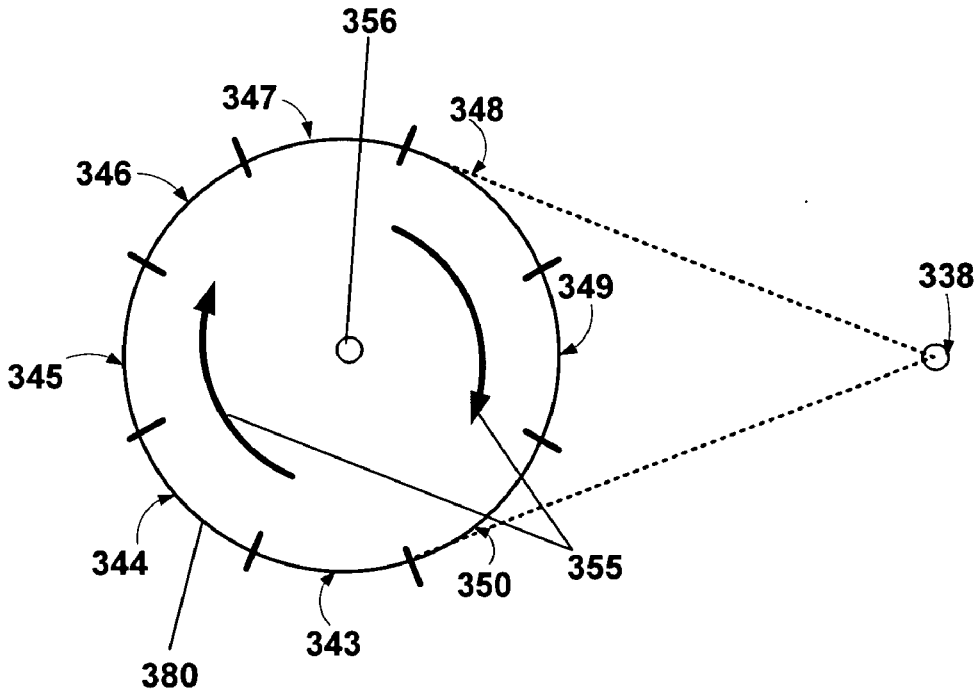

FIGURE 3D

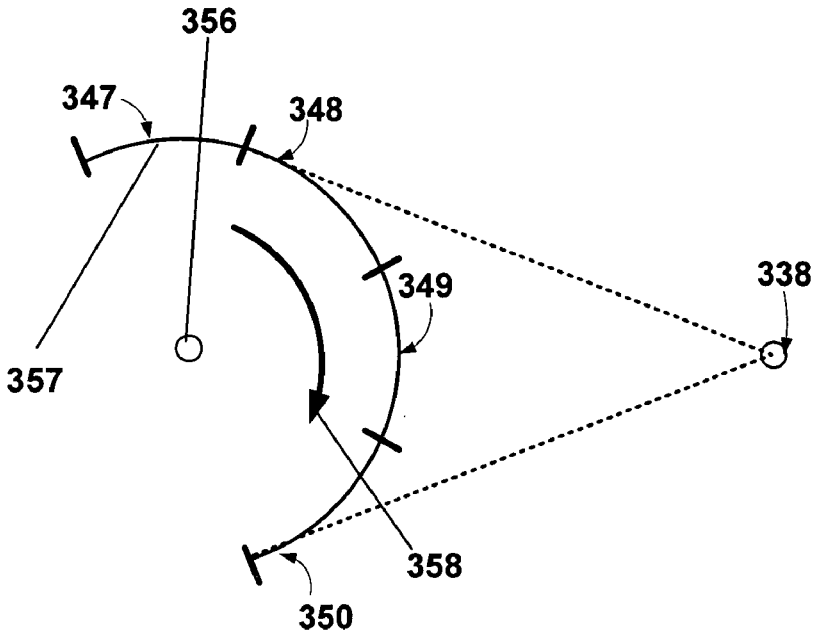

FIGURE 3E