US 20060092344A1

(19) United States

(12) Patent Application Publication

(10) Pub. No.: US 2006/0092344 A1

(43) Pub. Date: May 4, 2006

Ura et al.

(54) ILLUMINATION UNIT AND LIQUID CRYSTAL DISPLAY COMPRISING IT

(76) Inventors: **Toshihiko Ura**, Nomi-gun, Ishikawa (JP); **Yasushi Sakuda**, Nomi-gun, Ishikawa (JP); **Yoshinori Yasuda**, Ishikawa-gun, Ishikawa (JP)

Correspondence Address:
MCDERMOTT WILL & EMERY LLP
600 13TH STREET, N.W.
WASHINGTON, DC 20005-3096 (US)

(21) Appl. No.: **10/528,077**

(22) PCT Filed: **Sep. 19, 2002**

(86) PCT No.: **PCT/JP02/09594**

Publication Classification

(51) **Int. Cl.**
G02F 1/1333 (2006.01)
G02F 1/1335 (2006.01)

(52) **U.S. Cl.** **349/58**; 349/64

(57) **ABSTRACT**
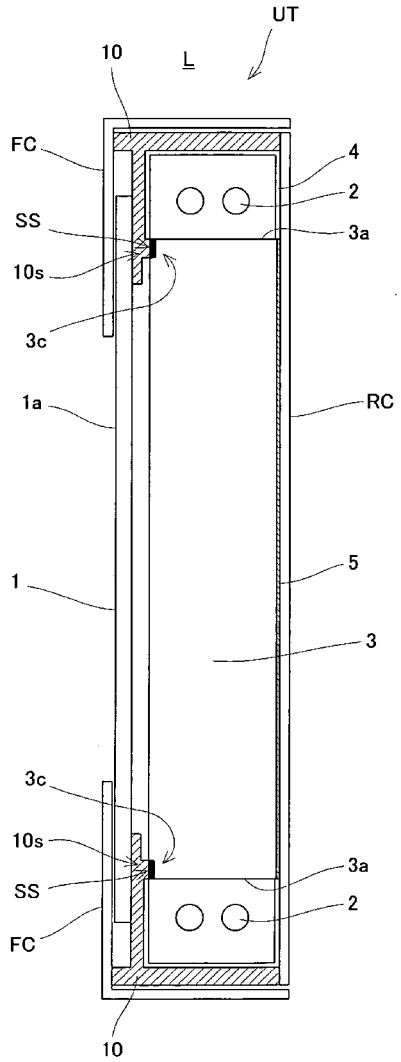
In a liquid crystal display device according to the present invention, a contact holding portion (**10***s*) which contacts a light guiding plate (**3**) is provided on a housing (**10**), and, at least either of the contact holding portion (**10***s*) of the housing (**10**) and a portion (**3***b*) of the light guiding plate (**3**) corresponding to the contact holding portion of the housing has a processed surface SA formed by a process such as texturing for increasing roughness degree thereof. And, lubricating grease is applied to at least either of the contact holding portion (**10***s*) of the housing (**10**) and the portion (**3***b*) of the light guiding plate (**3**) corresponding to the contact holding portion of the housing.