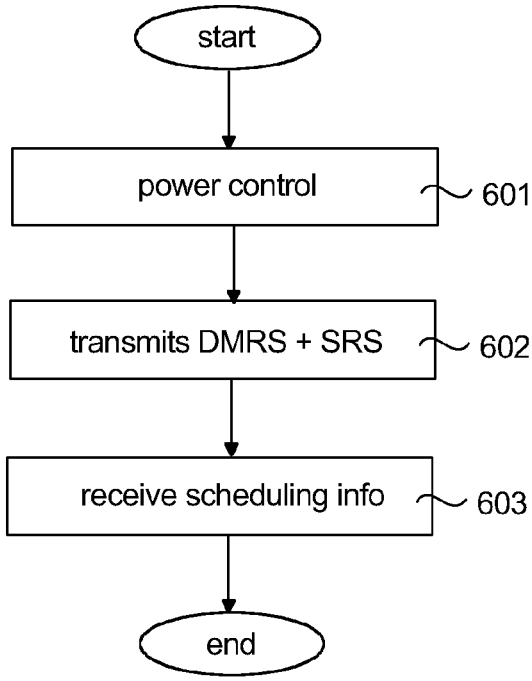
start
power control
601
transmits DMRS + SRS
602
receive scheduling info
603
end

Fig. 6

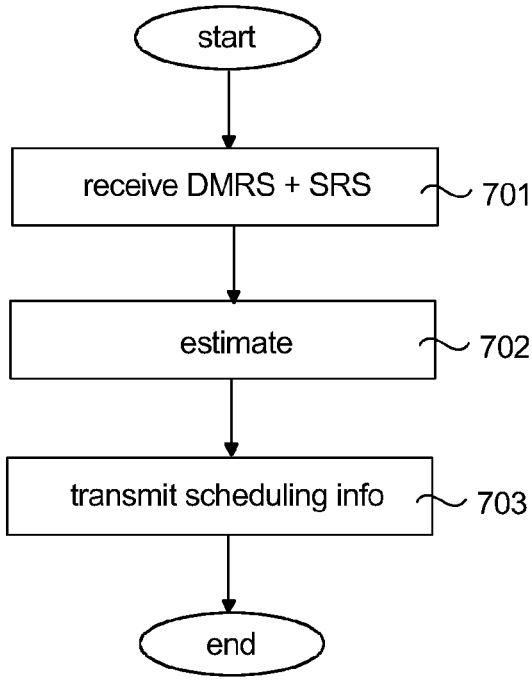
start
receive DMRS + SRS
701
estimate
702
transmit scheduling info
703
end

Fig. 7