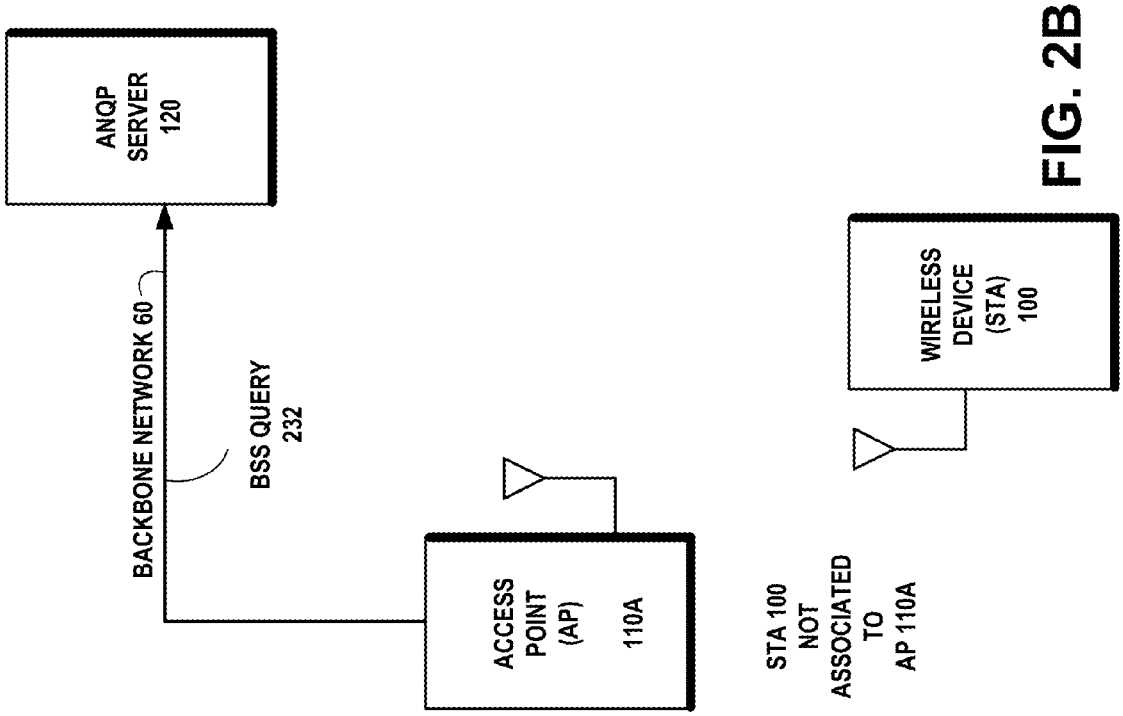
ANQP SERVER 120
BACKBONE NETWORK 60
BSS QUERY 232
ACCESS POINT (AP) 110A
WIRELESS DEVICE (STA) 100
STA 100 NOT ASSOCIATED TO AP 110A

FIG. 2B

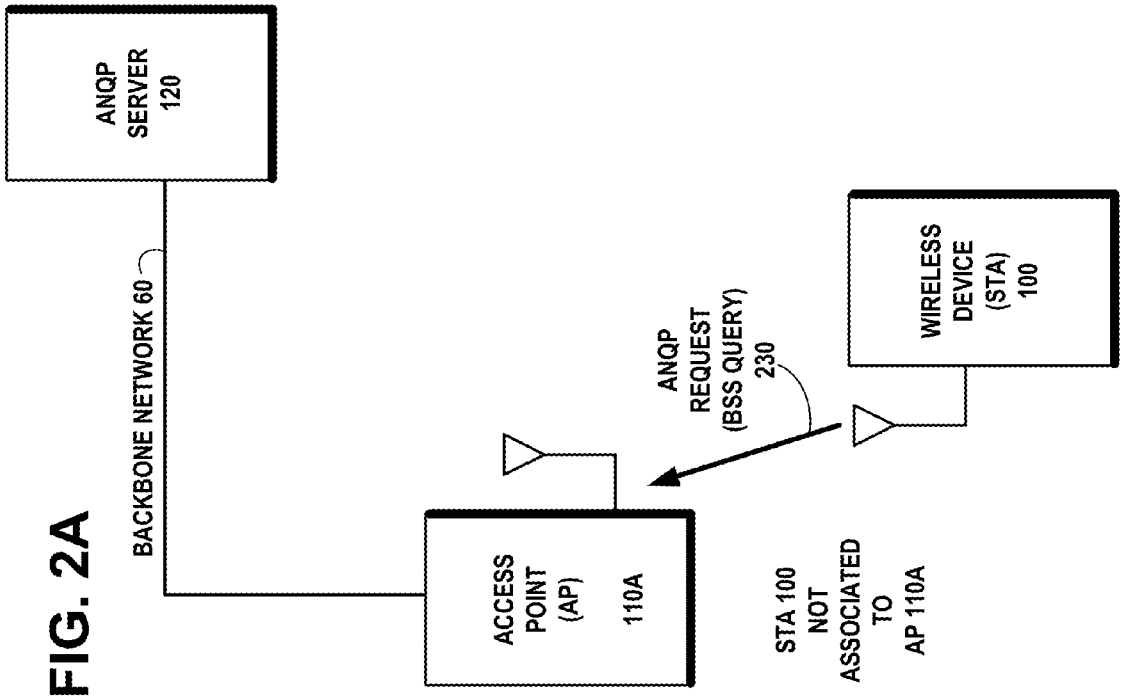
ANQP SERVER 120
BACKBONE NETWORK 60
ANQP REQUEST (BSS QUERY) 230
ACCESS POINT (AP) 110A
WIRELESS DEVICE (STA) 100
STA 100 NOT ASSOCIATED TO AP 110A

FIG. 2A