FIG. 9

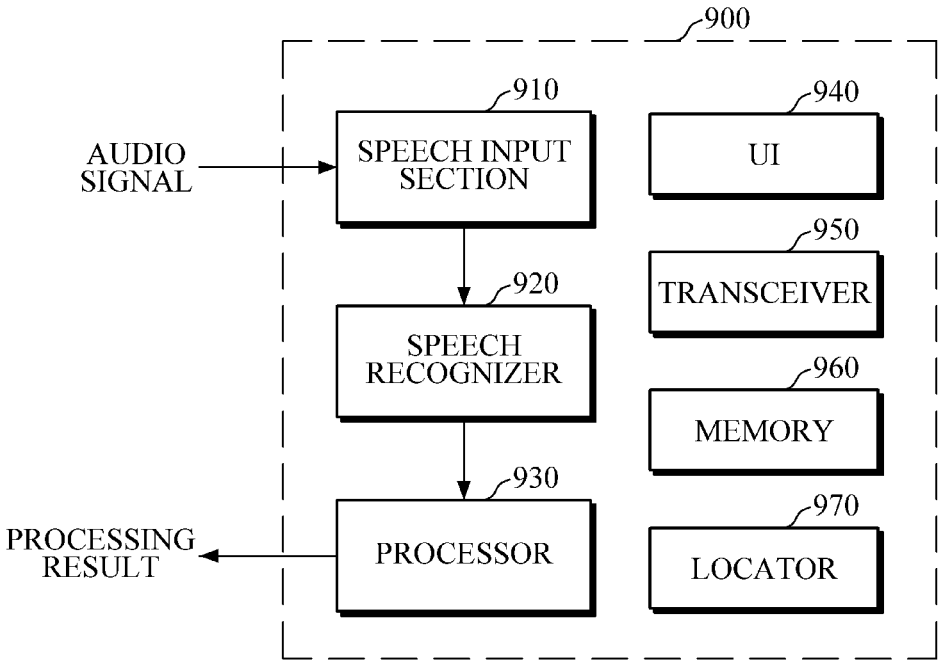
900
910
SPEECH INPUT SECTION
940
UI
AUDIO SIGNAL
950
TRANSCEIVER
920
SPEECH RECOGNIZER
960
MEMORY
930
970
PROCESSING RESULT
PROCESSOR
LOCATOR