FIG. 2

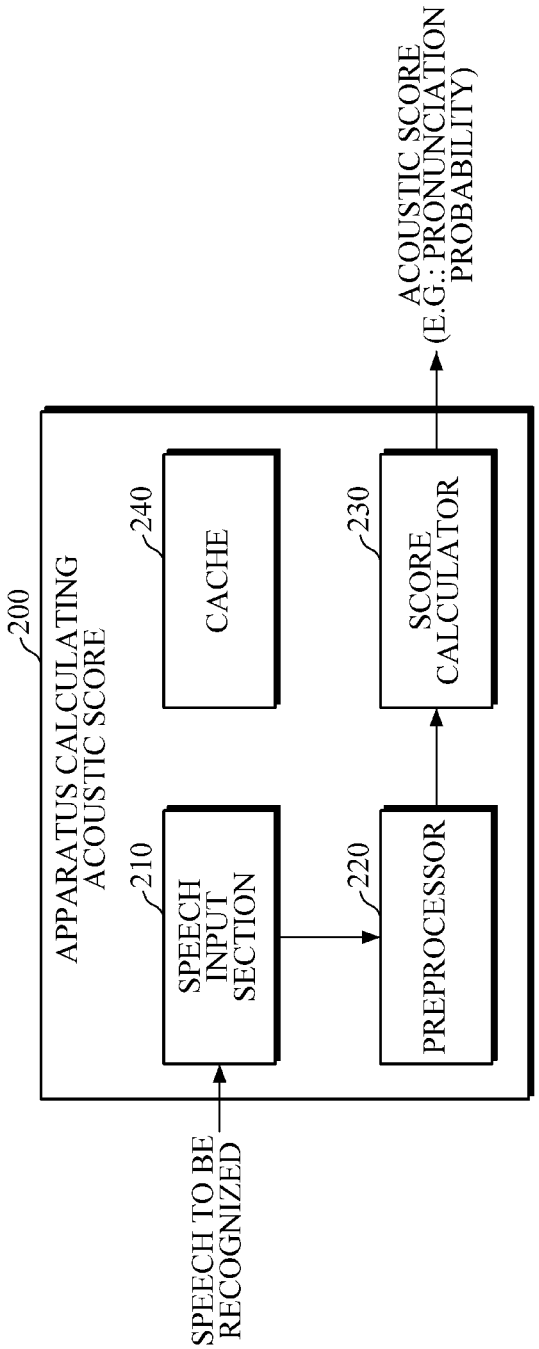
200
APPARATUS CALCULATING ACOUSTIC SCORE
210
SPEECH INPUT SECTION
240
CACHE
220
PREPROCESSOR
230
SCORE CALCULATOR
SPEECH TO BE RECOGNIZED
ACOUSTIC SCORE (E.G.: PRONUNCIATION PROBABILITY)