Fig. 2

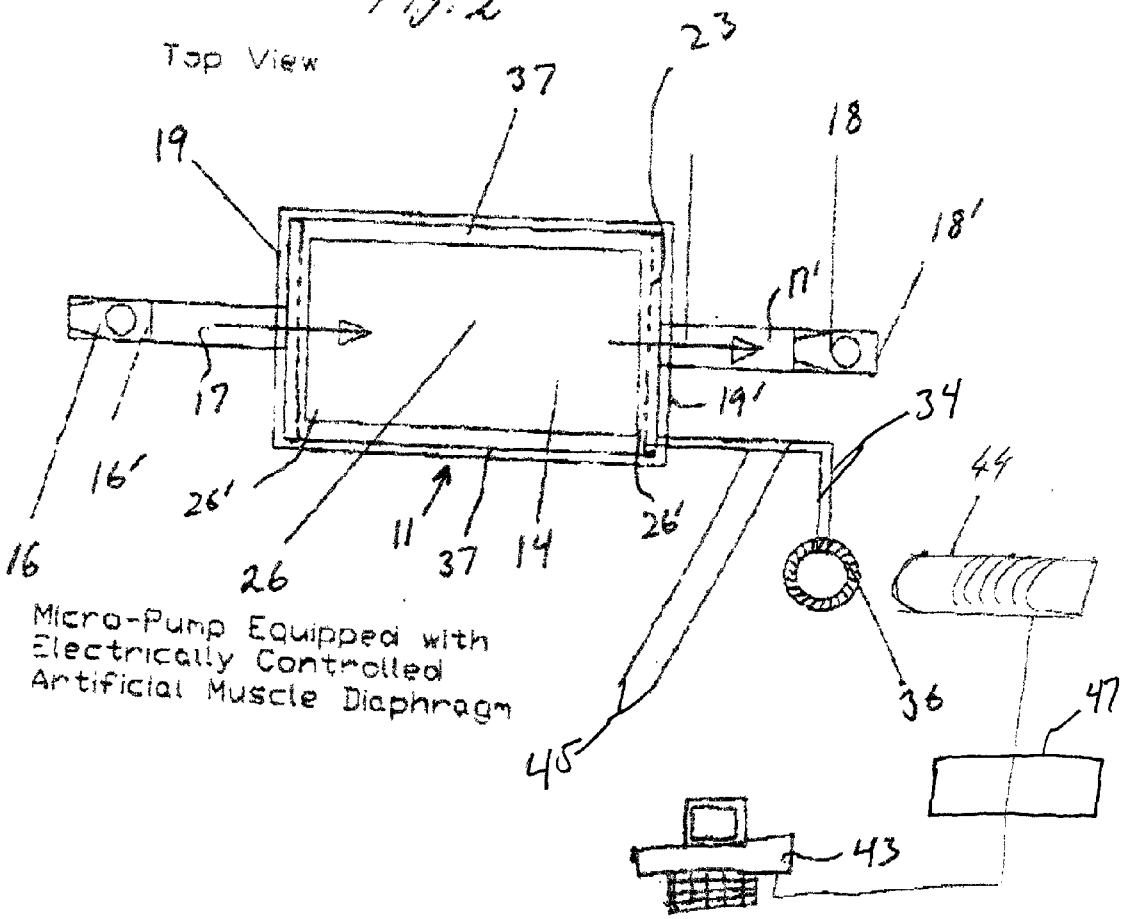

Micro-Pump Equipped with Electrically Controlled Artificial Muscle Diaphragm