Fig. 3

Side View
Diaphragm Muscle Flexing Up

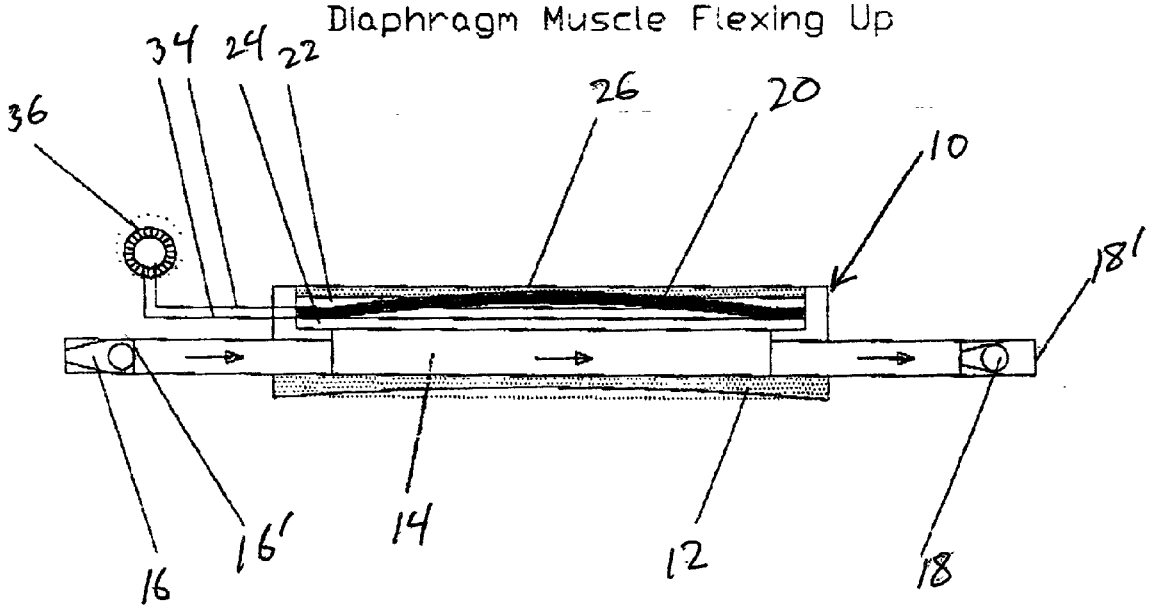

Micro-Pump Equipped With Electrically
Controlllable Artificial Muscle Diaphragm