Side View: Diaphragm Muscle Flexing Down

Fig. 4

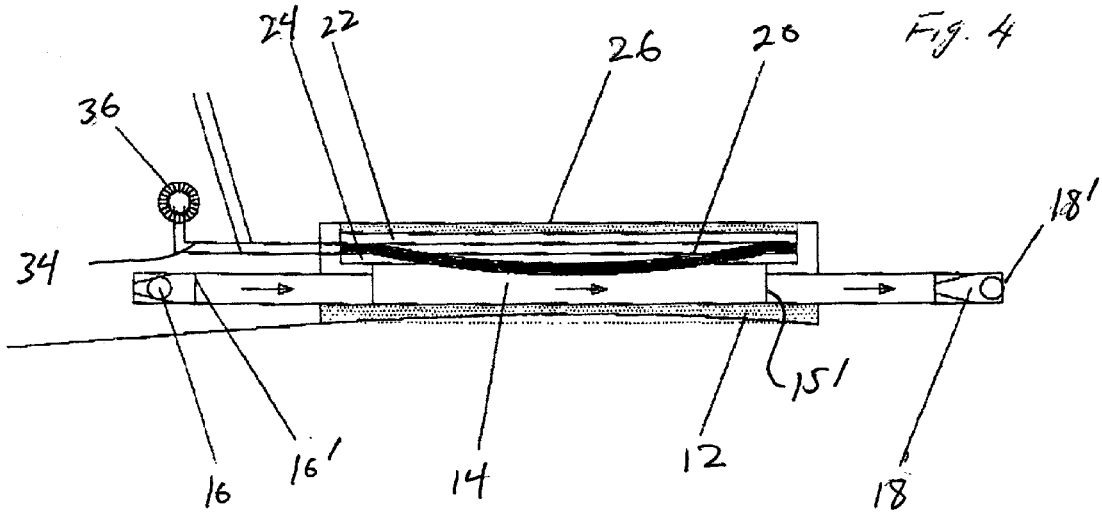

Micro-Pump Equipped With Electrically Controlllable Artificial Muscle Diaphragm