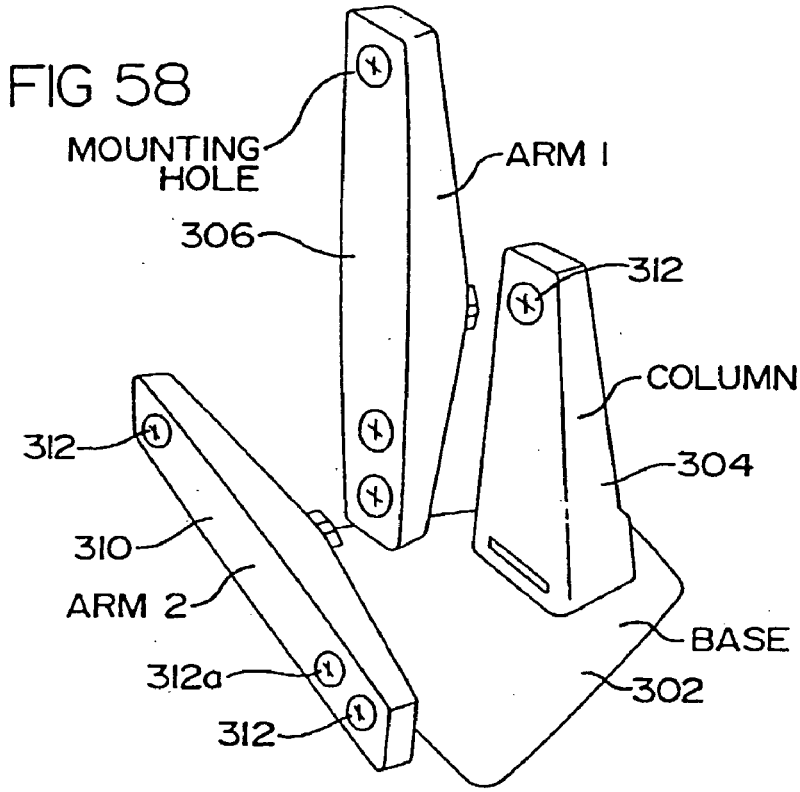
FIG 58
MOUNTING HOLE
ARM 1
306
312
COLUMN
312
304
310
ARM 2
BASE
312a
302
312

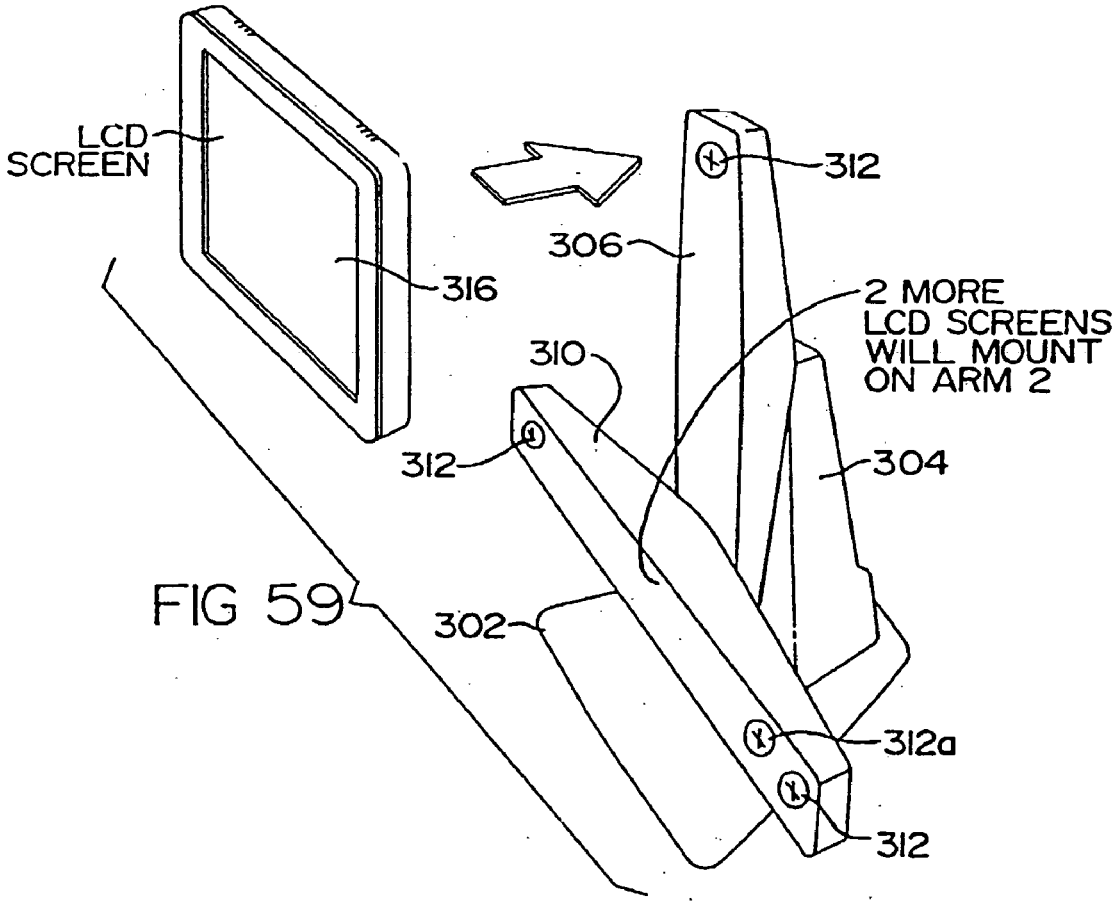
LCD SCREEN
312
306
316
2 MORE LCD SCREENS WILL MOUNT ON ARM 2
310
312
304
FIG 59
302
312a
312