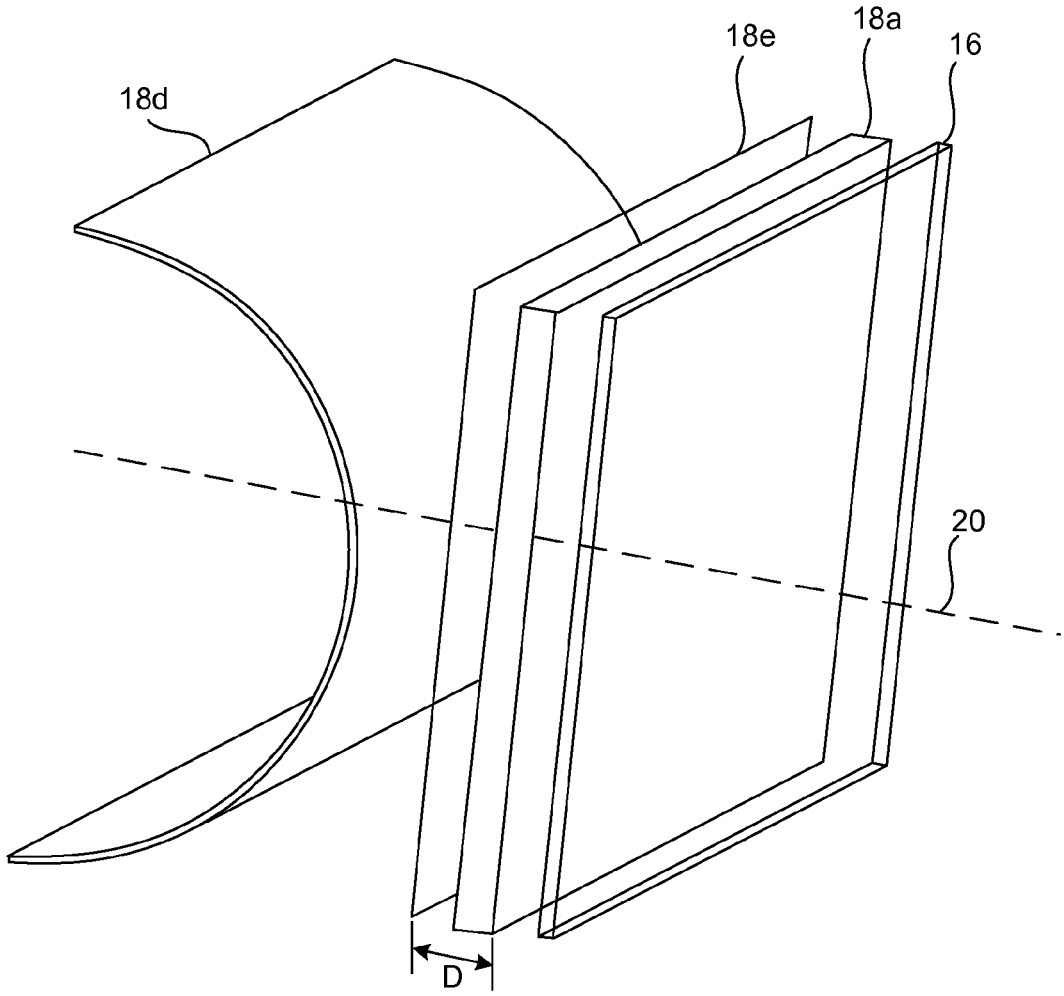

Figure 1C