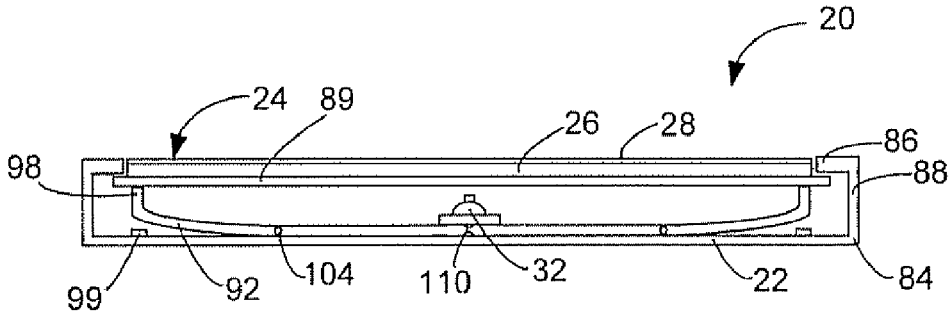

Figure 12

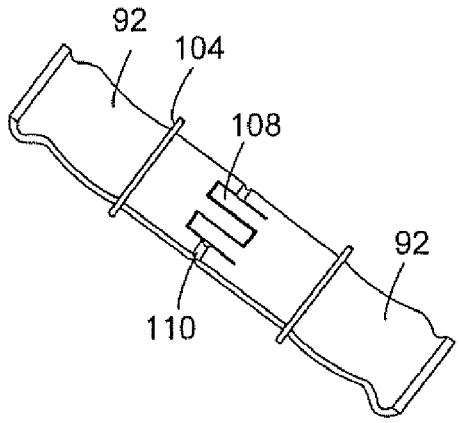

Figure 13