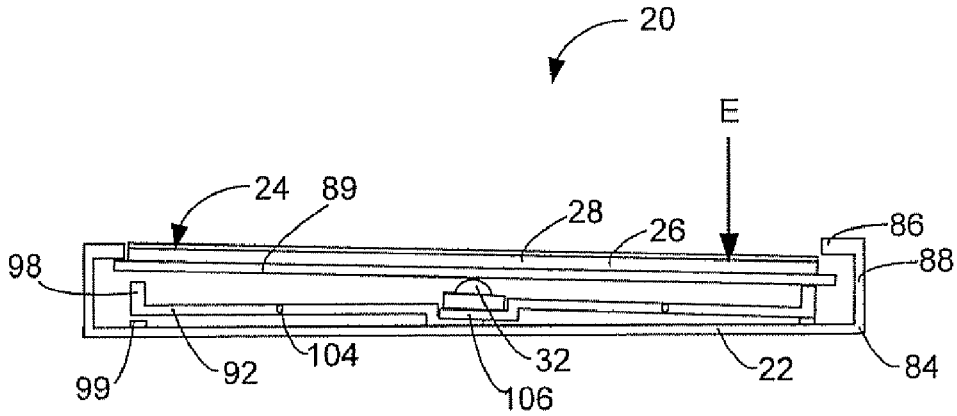

Figure 11