FIG. 1
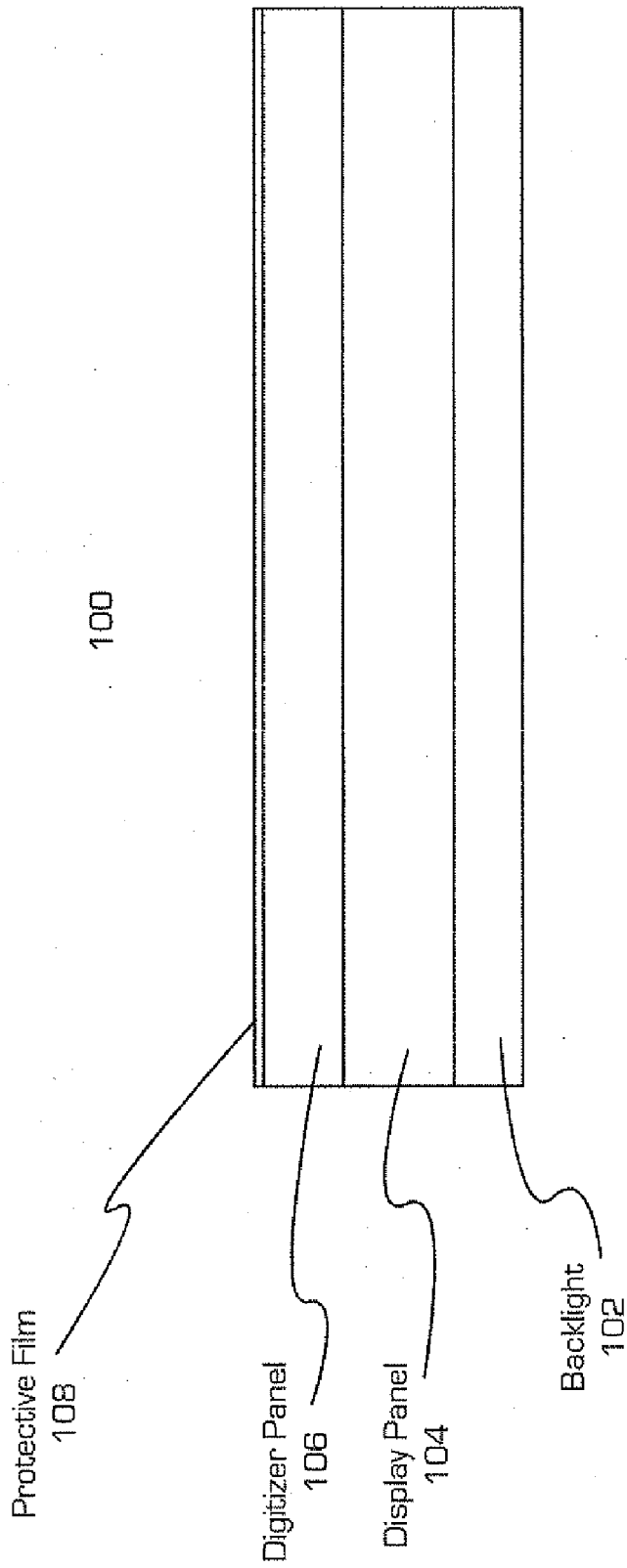
PRIOR ART