FIG. 1

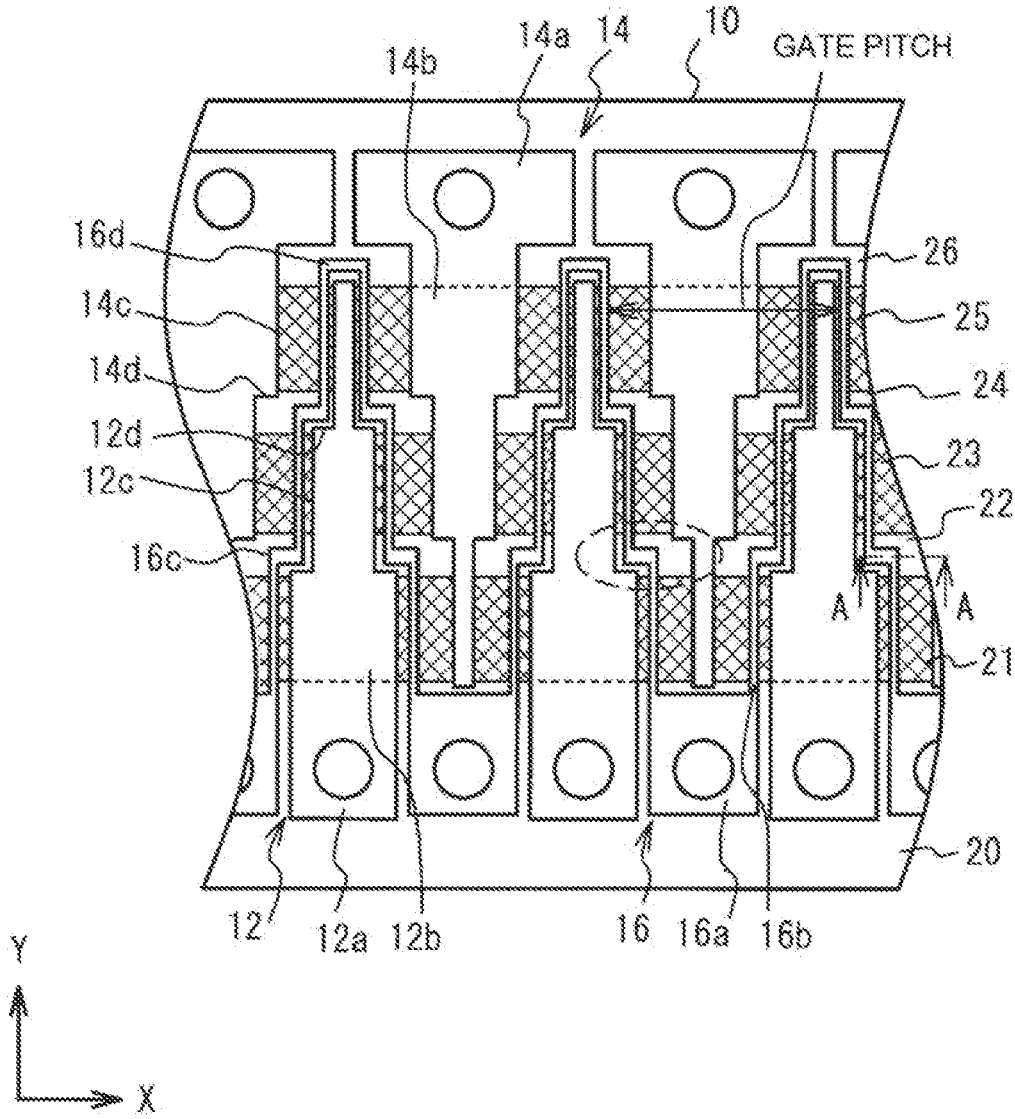
10
14
14a
14b
GATE PITCH
16d
14c
14d
12d
12c
16c
26
25
24
23
22
A
A
21
20
12
12a
12b
16
16a
16b
Y
X