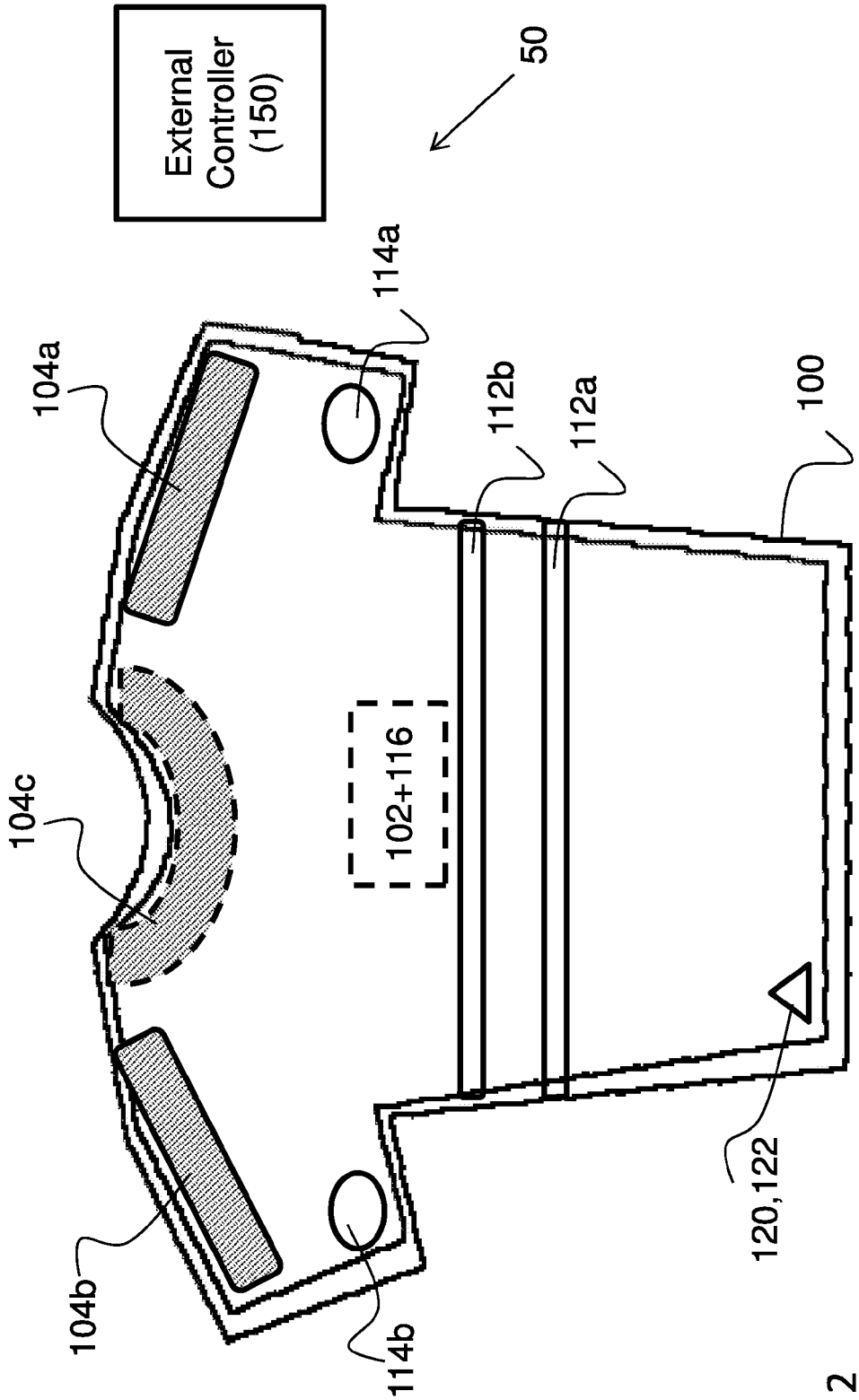
External Controller (150)
50
114a
104a
112b
112a
100
102+116
104c
104b
114b
120,122

FIG. 2