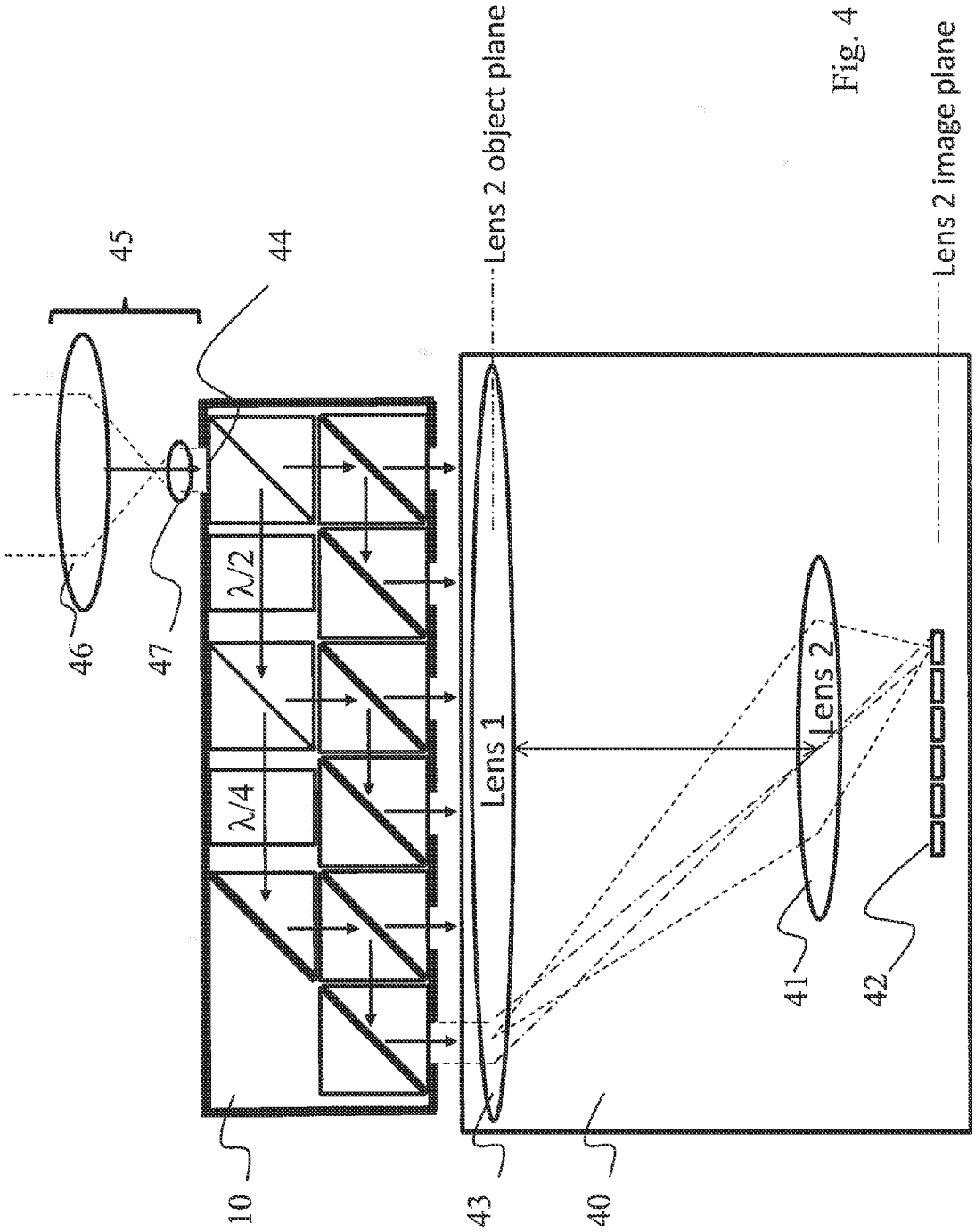
45
44
46
47
λ/2
λ/4
10
Lens 1
43
Lens 2 object plane
40
Lens 2
41
42
Lens 2 image plane

Fig. 4