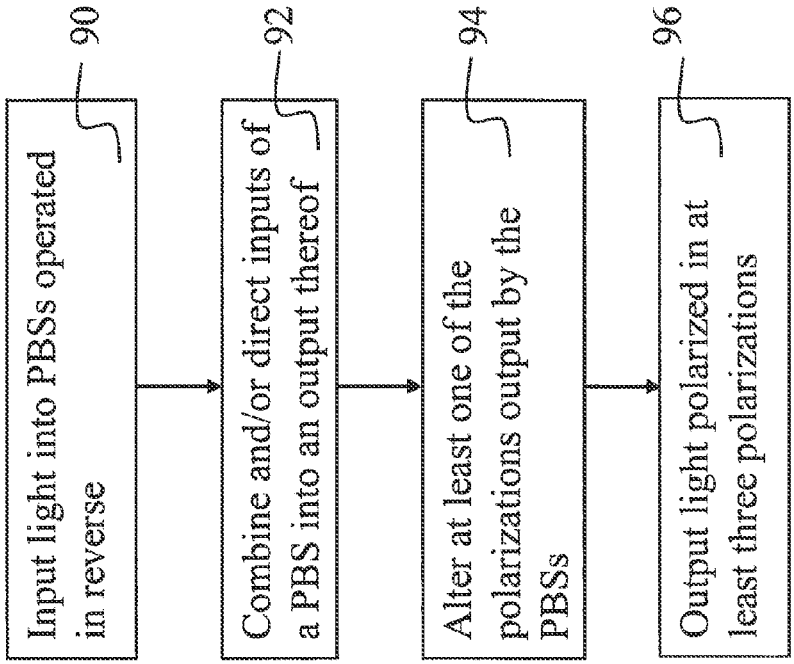
Input light into PBSs operated in reverse
90
Combine and/or direct inputs of a PBS into an output thereof
92
Alter at least one of the polarizations output by the PBSs
94
Output light polarized in at least three polarizations
96

Fig. 9

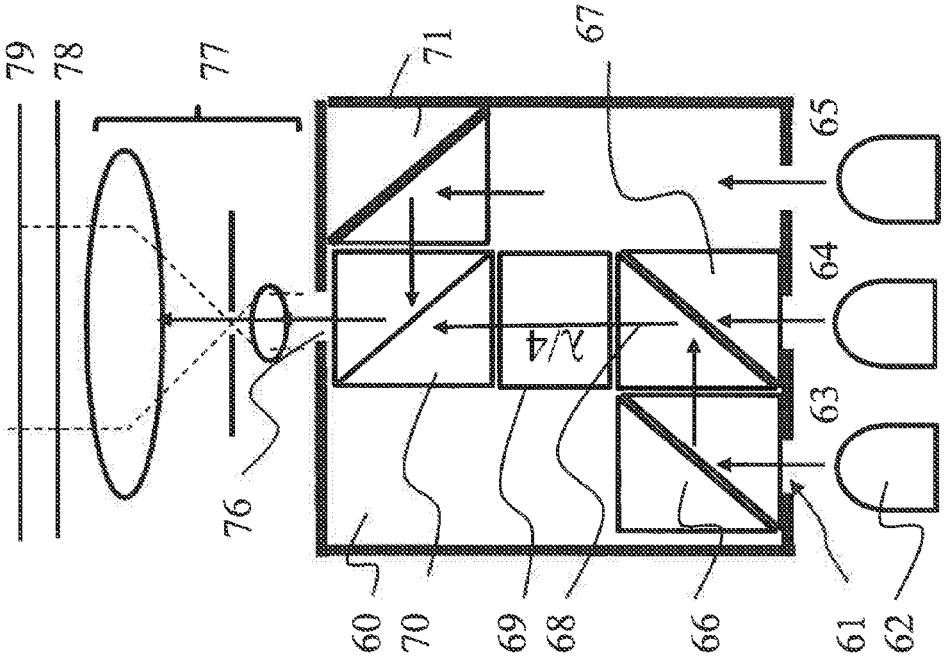
79
78
77
76
71
67
65
64
63
λ/4
60
70
69
68
66
61
62

Fig. 6