FIG. 1

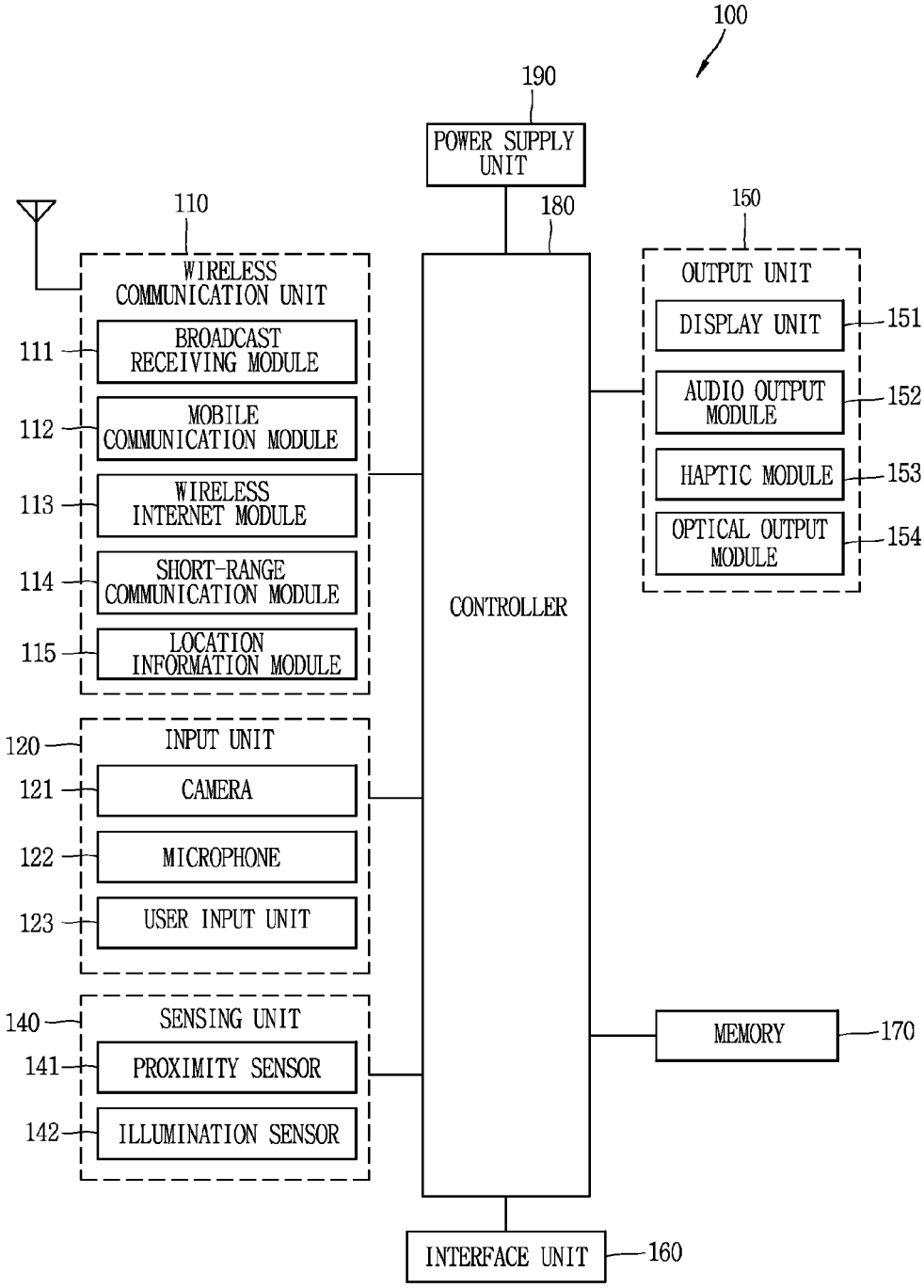
100
190
POWER SUPPLY UNIT
110
180
150
WIRELESS COMMUNICATION UNIT
111
BROADCAST RECEIVING MODULE
112
MOBILE COMMUNICATION MODULE
113
WIRELESS INTERNET MODULE
114
SHORT-RANGE COMMUNICATION MODULE
115
LOCATION INFORMATION MODULE
CONTROLLER
OUTPUT UNIT
DISPLAY UNIT
151
AUDIO OUTPUT MODULE
152
HAPTIC MODULE
153
OPTICAL OUTPUT MODULE
154
120
INPUT UNIT
121
CAMERA
122
MICROPHONE
123
USER INPUT UNIT
140
SENSING UNIT
141
PROXIMITY SENSOR
142
ILLUMINATION SENSOR
MEMORY
170
INTERFACE UNIT
160