FIG. 1A

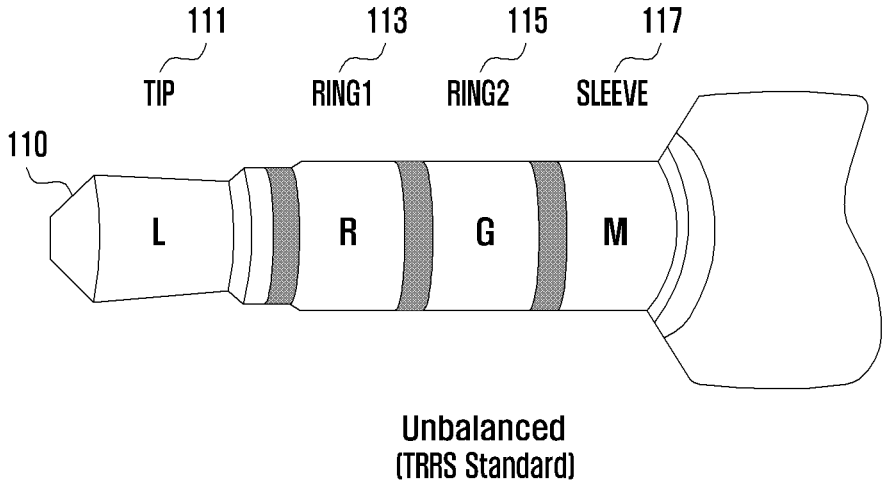
111
113
115
117
TIP
RING1
RING2
SLEEVE
110
L
R
G
M
Unbalanced
(TRRS Standard)