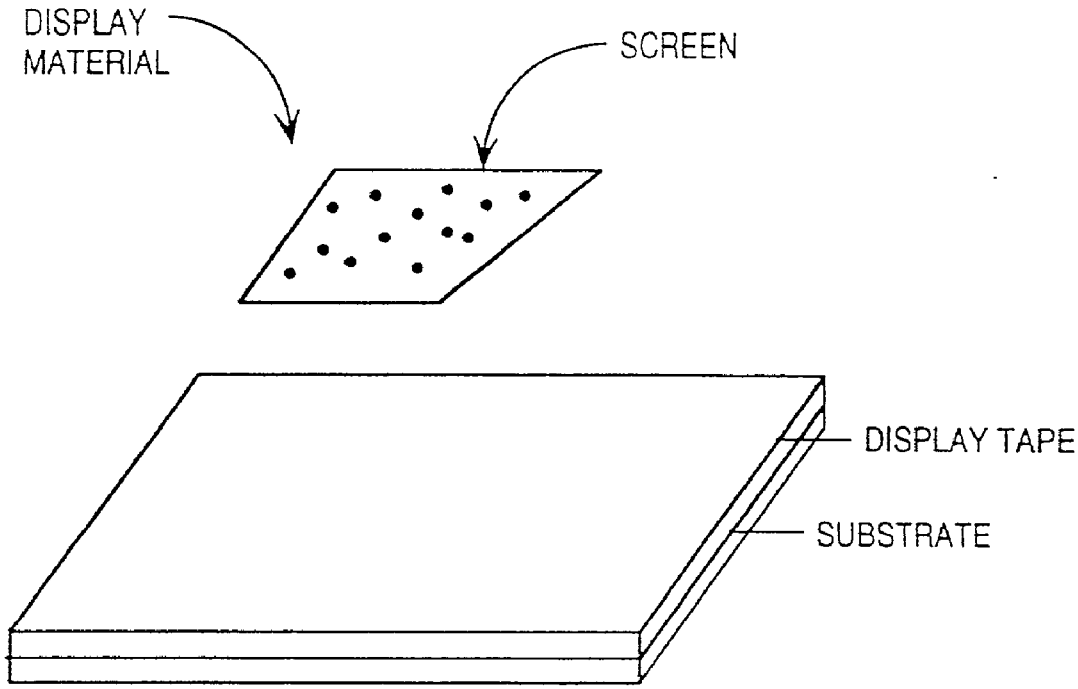
DISPLAY
MATERIAL
SCREEN
DISPLAY TAPE
SUBSTRATE

Fig. 22

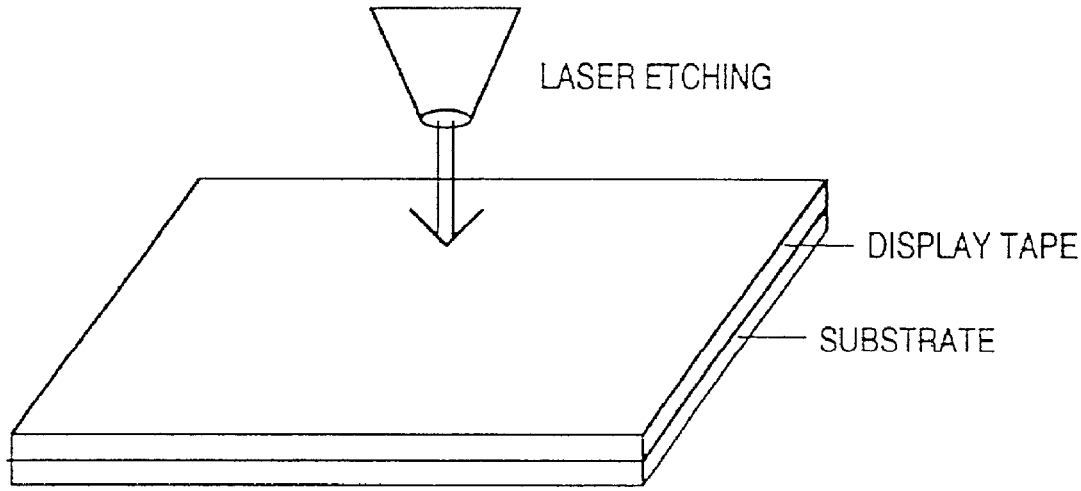
LASER ETCHING
DISPLAY TAPE
SUBSTRATE

Fig. 23