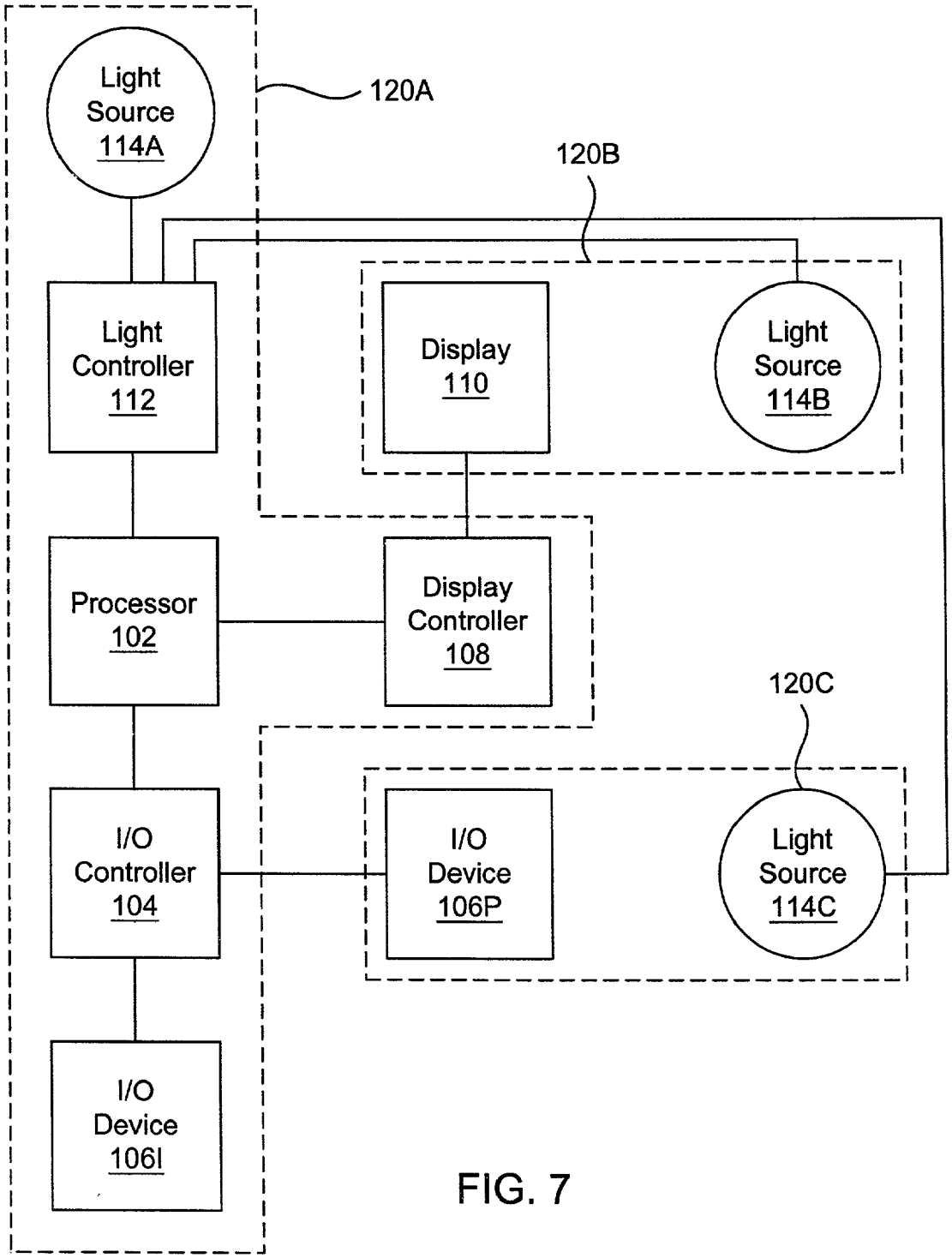
Light Source 114A
120A
120B
Light Controller 112
Display 110
Light Source 114B
Processor 102
Display Controller 108
120C
I/O Controller 104
I/O Device 106P
Light Source 114C
I/O Device 106I

FIG. 7