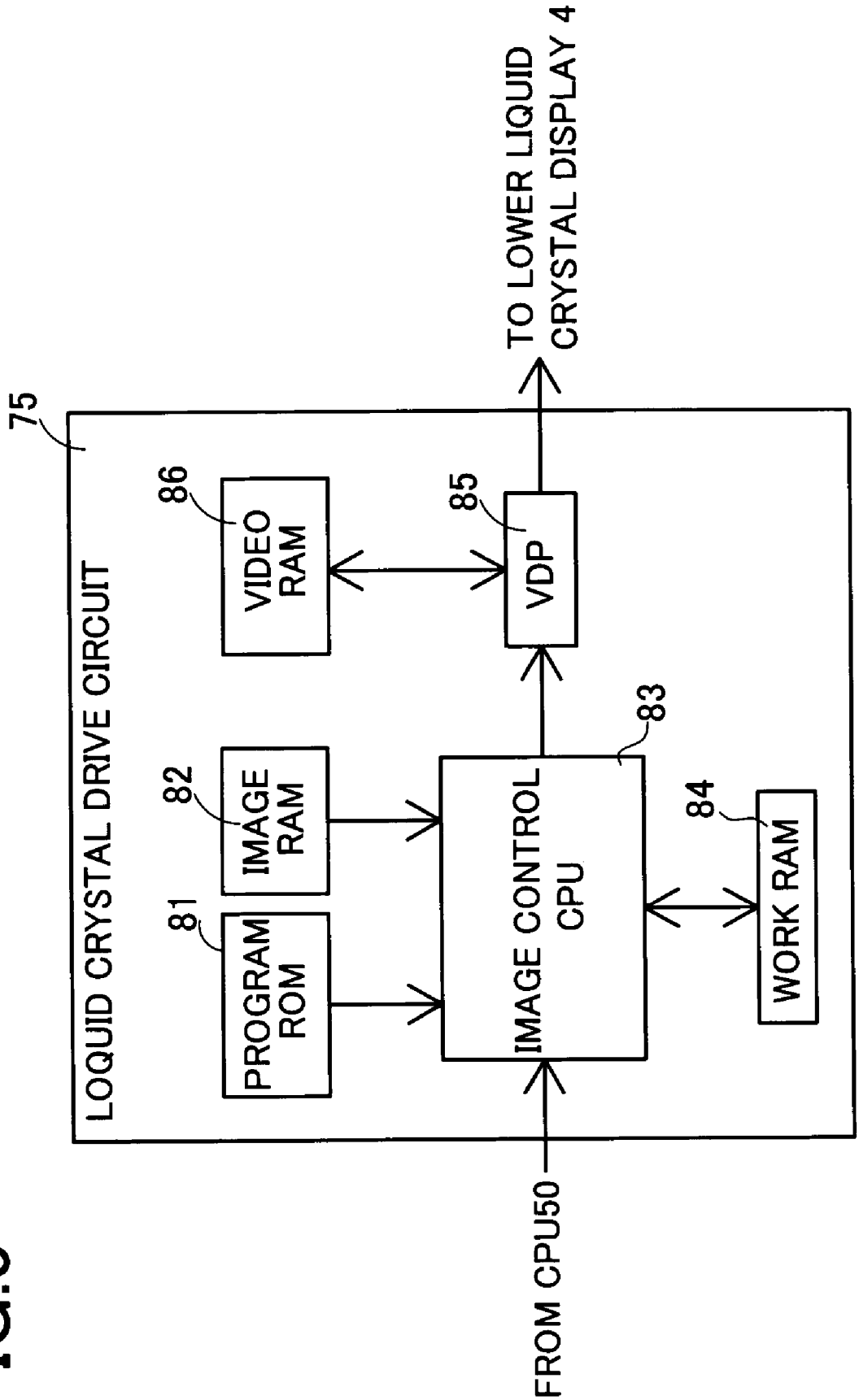
75
LOQUID CRYSTAL DRIVE CIRCUIT
81
PROGRAM ROM
82
IMAGE RAM
86
VIDEO RAM
IMAGE CONTROL CPU
83
VDP
85
WORK RAM
84
TO LOWER LIQUID CRYSTAL DISPLAY 4
FROM CPU50

FIG.5