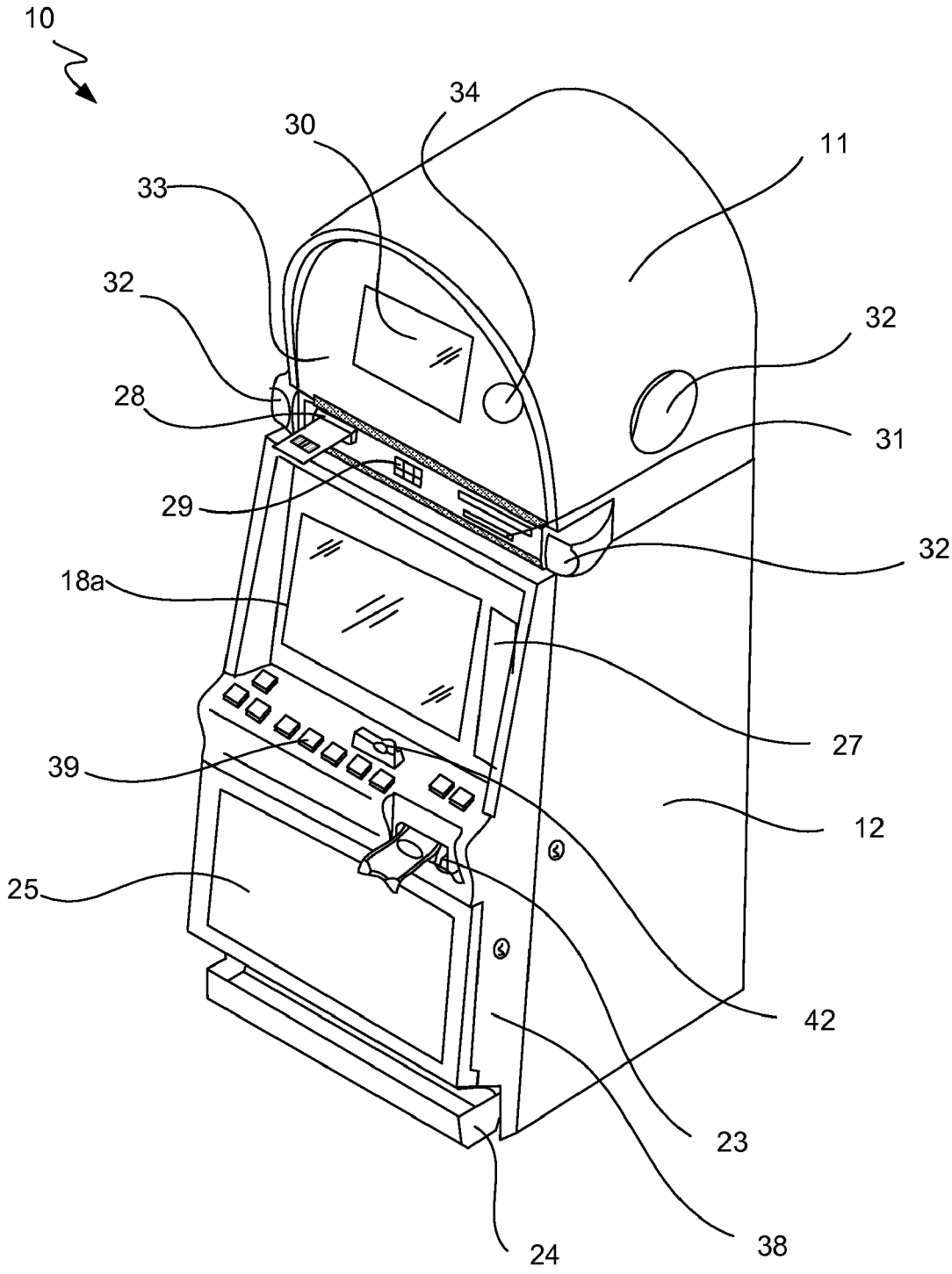

Figure 5A