FIG. 1

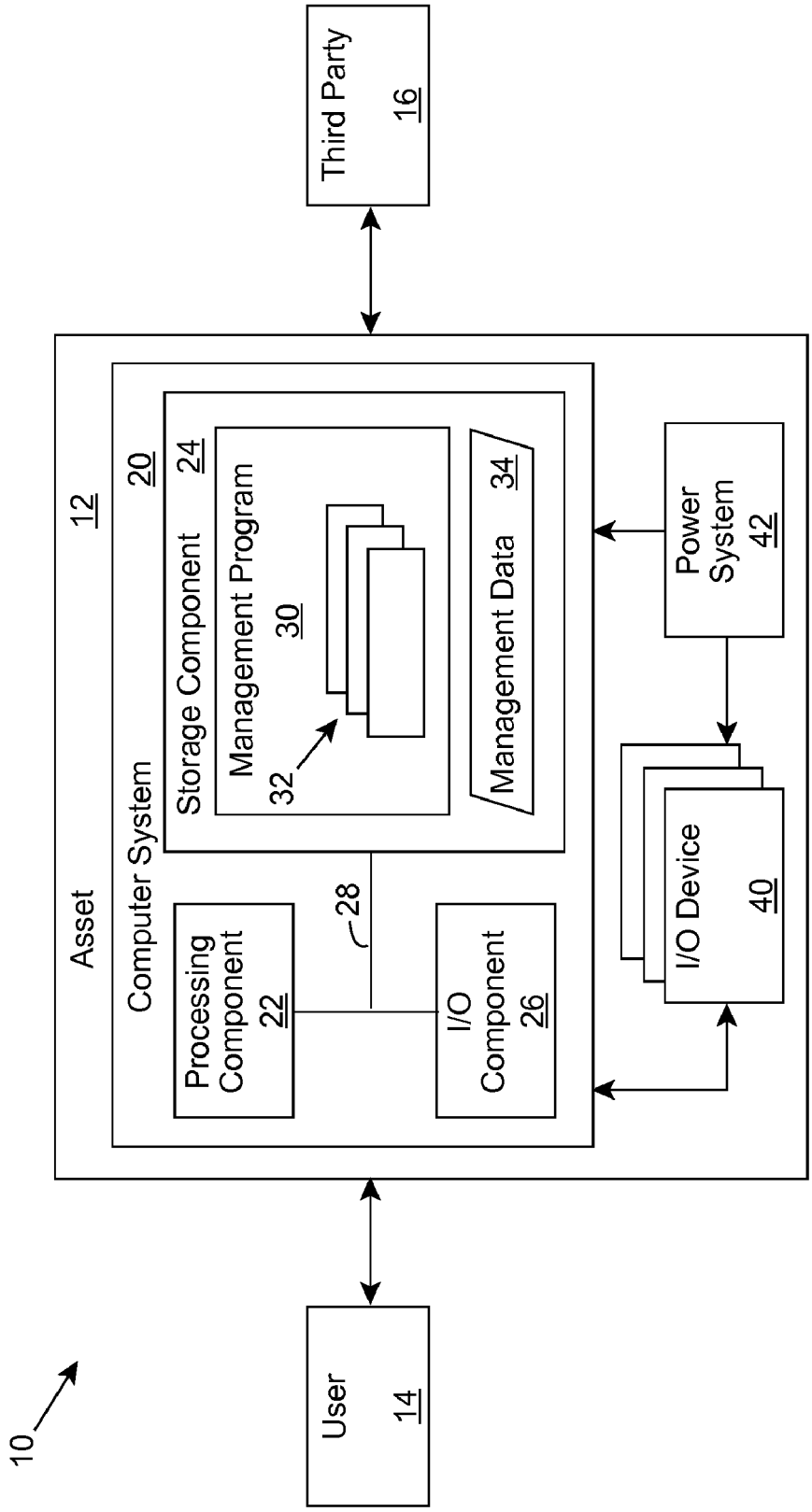
10
User
14
Asset
12
Computer System
20
Processing Component
22
28
I/O Component
26
Storage Component
24
Management Program
30
32
Management Data
34
Third Party
16
Power System
42
I/O Device
40