FIG.4

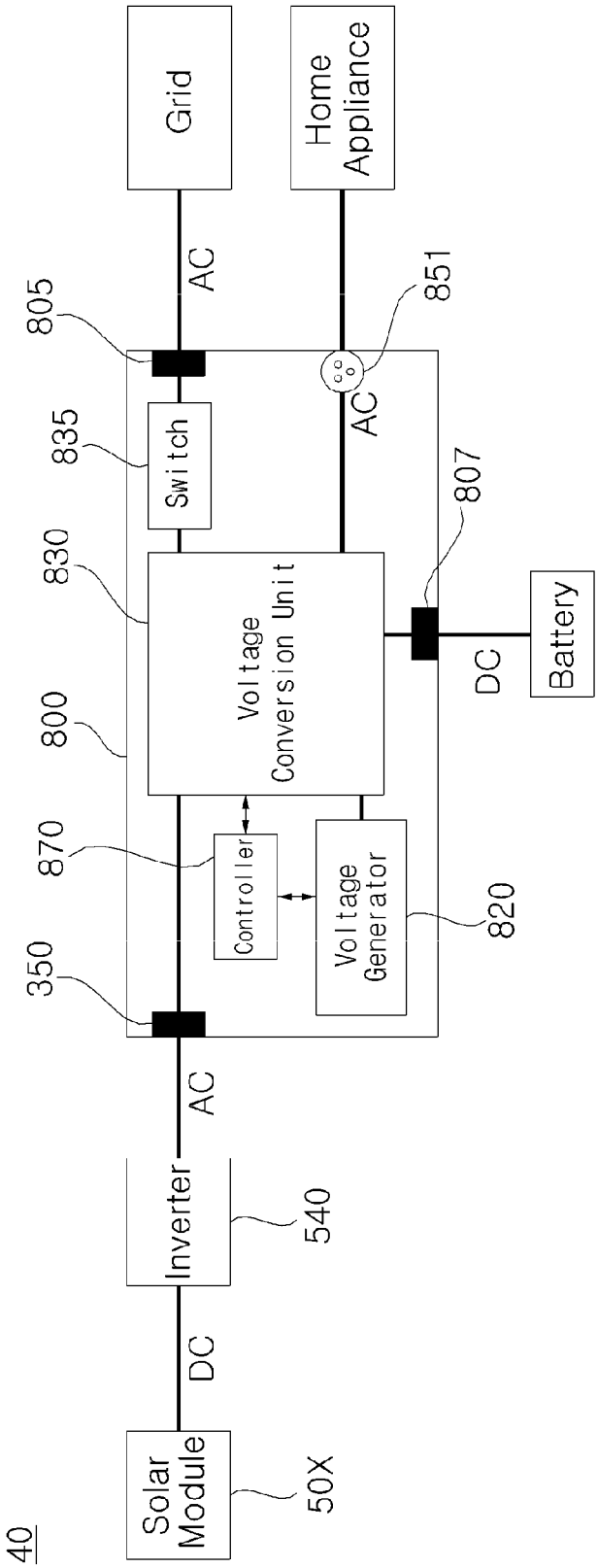
40
Solar Module
50X
DC
Inverter
540
AC
350
870
Controller
Voltage Generator
820
800
830
Voltage Conversion Unit
835
Switch
805
AC
Grid
Home Appliance
AC
851
807
DC
Battery