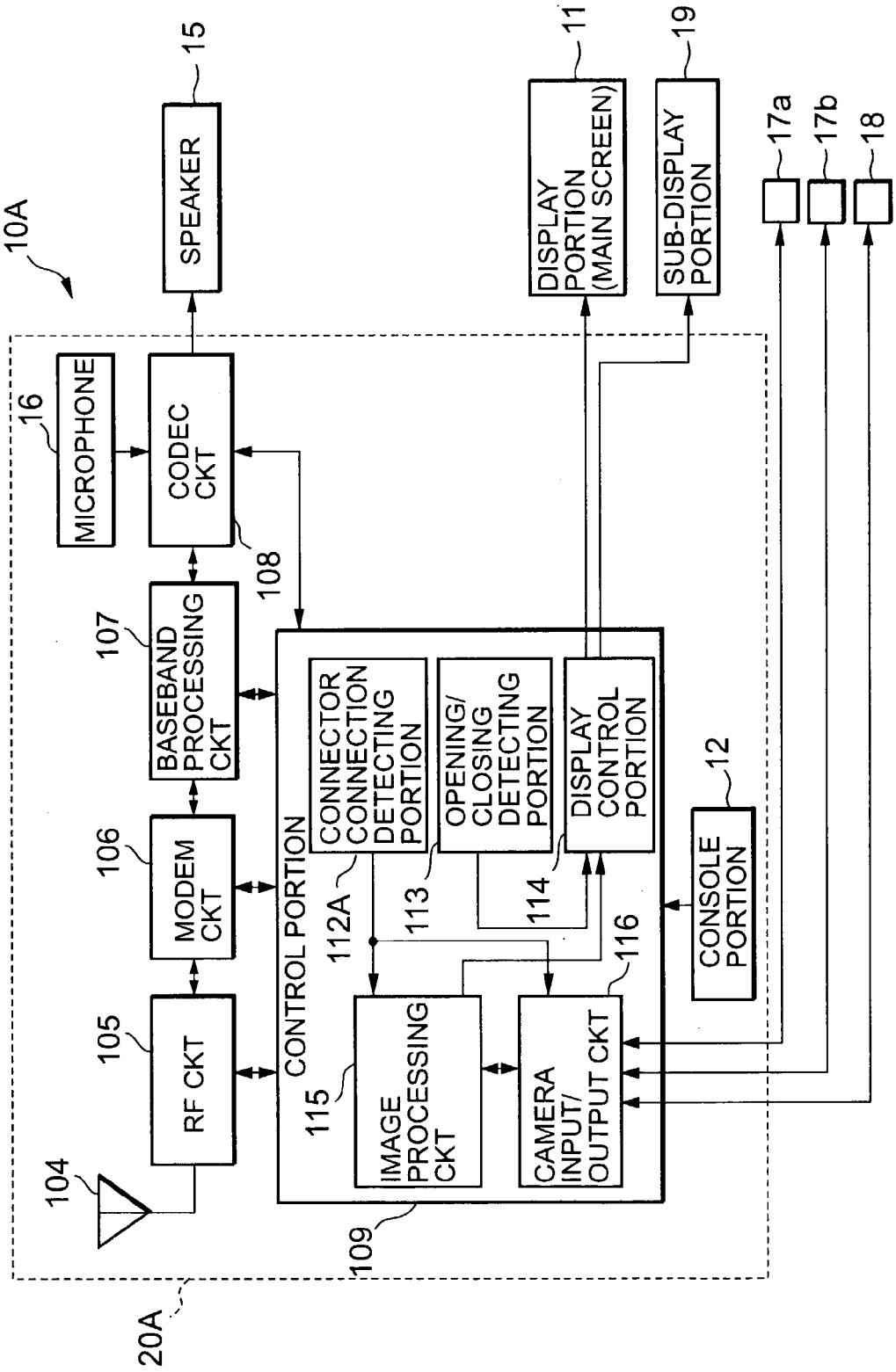
10A
SPEAKER
15
DISPLAY PORTION (MAIN SCREEN)
11
SUB-DISPLAY PORTION
19
17a
17b
18
MICROPHONE
16
CODEC CKT
108
BASEBAND PROCESSING CKT
107
MODEM CKT
106
RF CKT
105
104
CONTROL PORTION
CONNECTOR CONNECTION DETECTING PORTION
112A
OPENING/ CLOSING DETECTING PORTION
113
DISPLAY CONTROL PORTION
114
IMAGE PROCESSING CKT
115
CAMERA INPUT/ OUTPUT CKT
116
CONSOLE PORTION
12
109
20A

FIG. 9