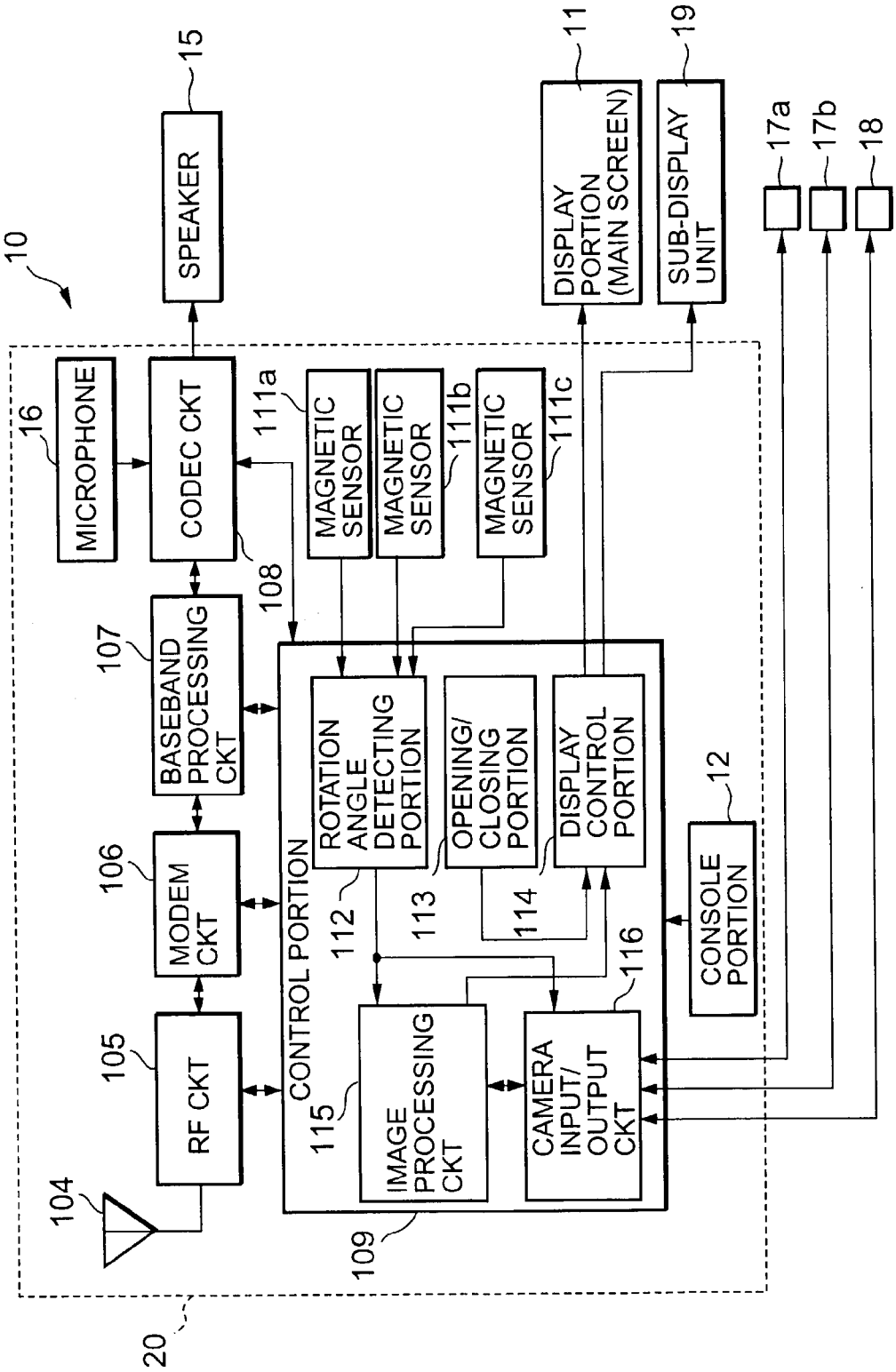
10
SPEAKER
15
MICROPHONE
16
CODEC CKT
108
111a
MAGNETIC SENSOR
MAGNETIC SENSOR
111b
MAGNETIC SENSOR
111c
DISPLAY PORTION (MAIN SCREEN)
11
SUB-DISPLAY UNIT
19
17a
17b
18
BASEBAND PROCESSING CKT
107
MODEM CKT
106
RF CKT
105
104
CONTROL PORTION
ROTATION ANGLE DETECTING PORTION
112
OPENING/ CLOSING PORTION
113
DISPLAY CONTROL PORTION
114
IMAGE PROCESSING CKT
115
CAMERA INPUT/ OUTPUT CKT
116
109
CONSOLE PORTION
12
20

FIG. 5