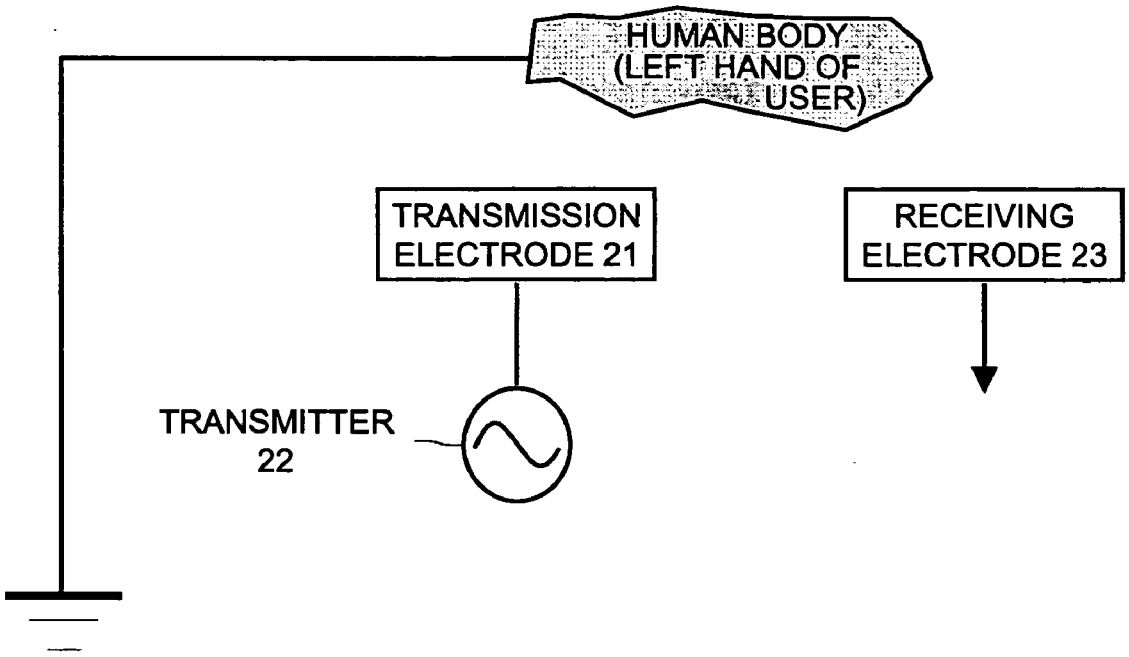
HUMAN BODY
(LEFT HAND OF
USER)
TRANSMISSION
ELECTRODE 21
RECEIVING
ELECTRODE 23
TRANSMITTER
22

FIG. 4

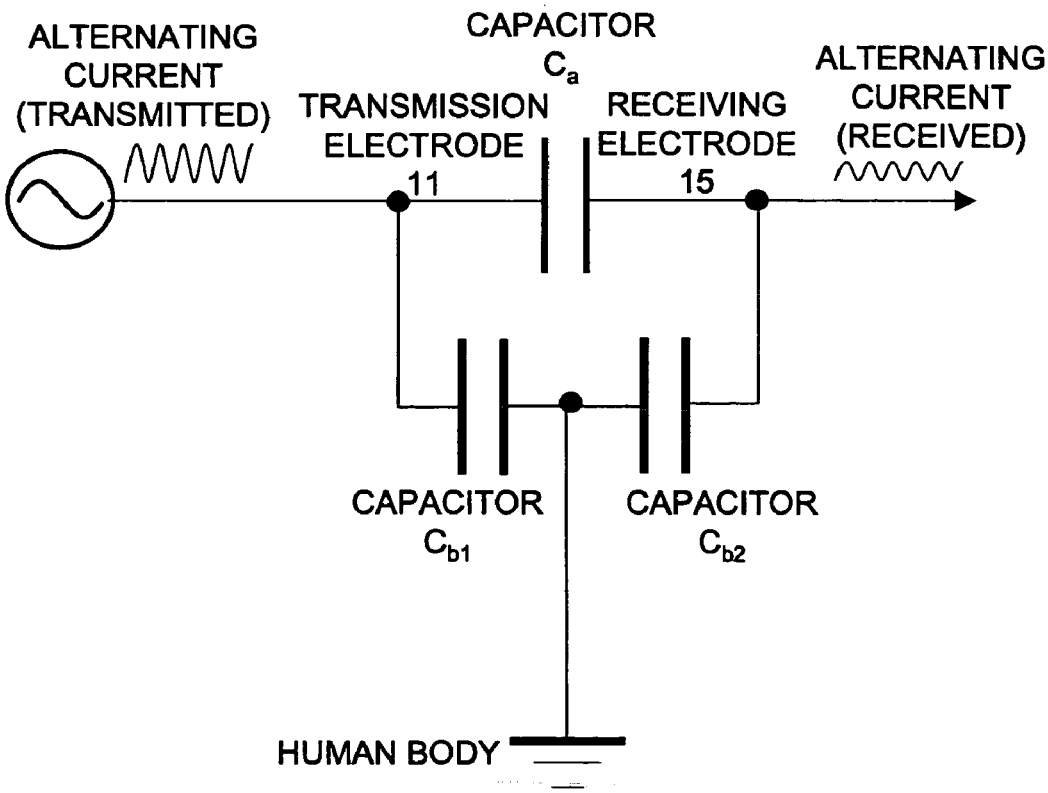
ALTERNATING
CURRENT
(TRANSMITTED)
CAPACITOR
C_a
TRANSMISSION
ELECTRODE
11
RECEIVING
ELECTRODE
15
ALTERNATING
CURRENT
(RECEIVED)
CAPACITOR
C_{b1}
CAPACITOR
C_{b2}
HUMAN BODY

FIG. 5