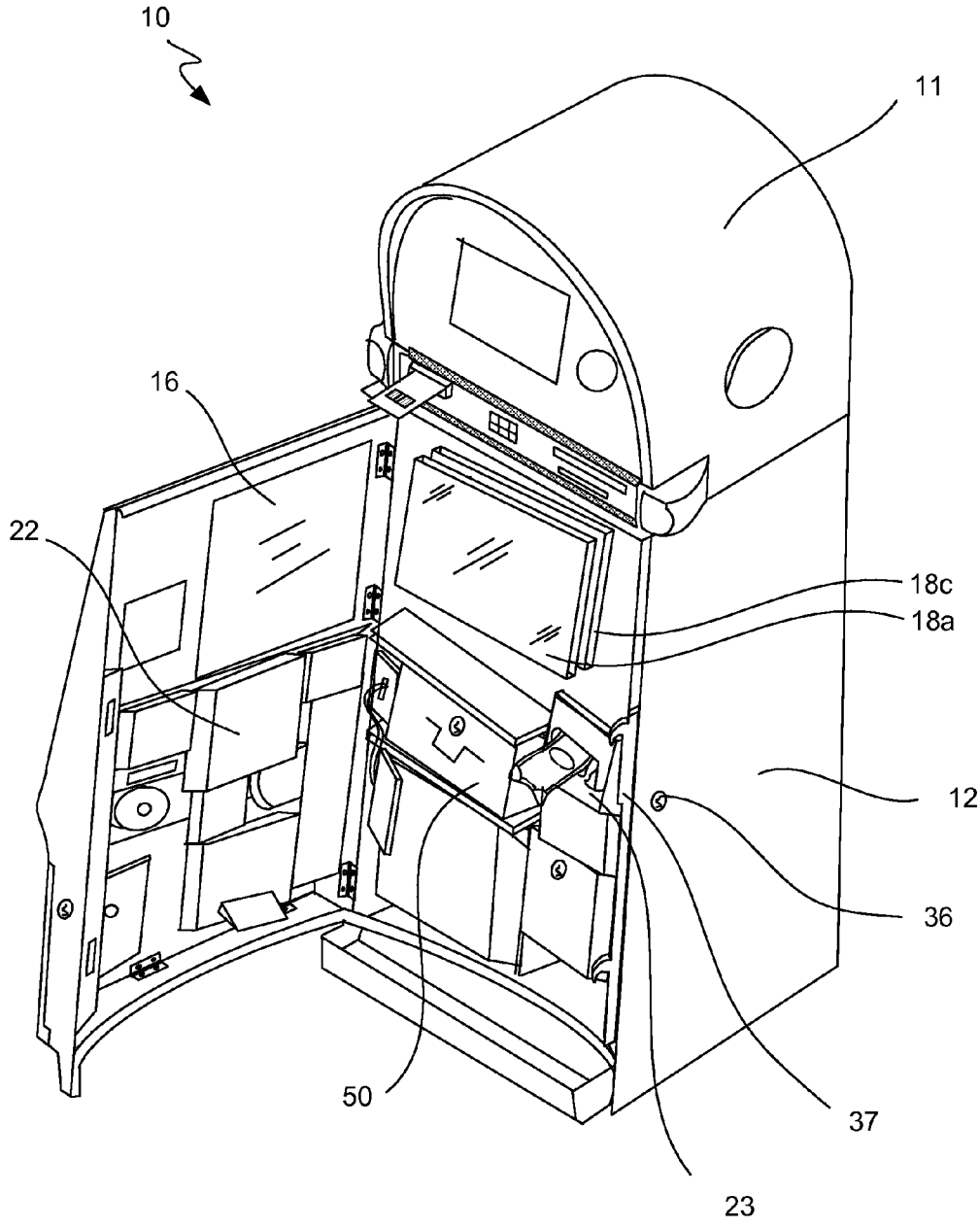

Figure 5B