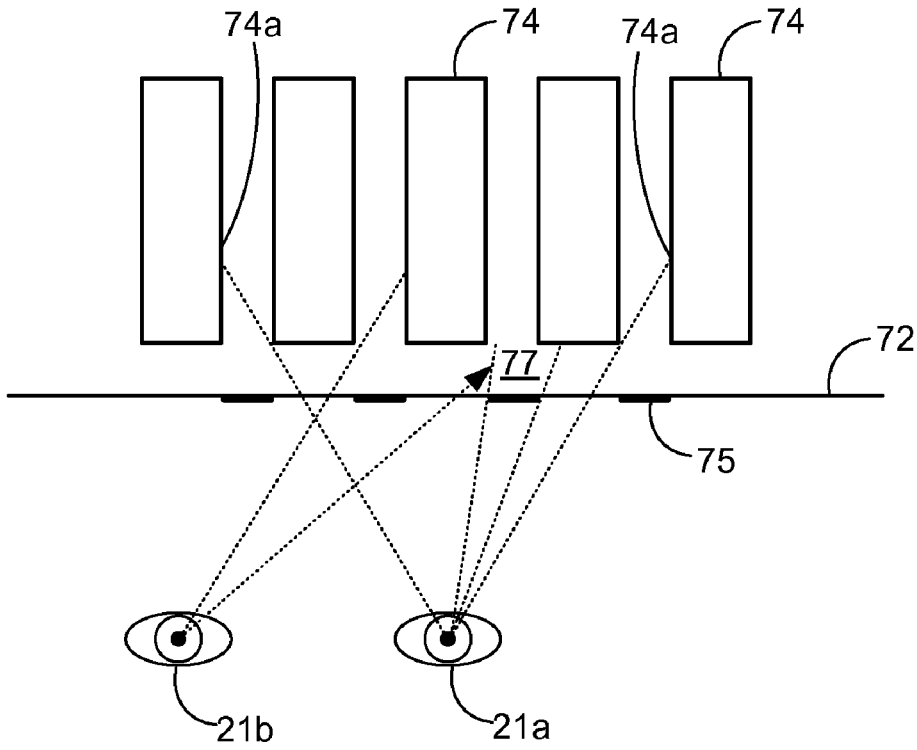

Figure 1A

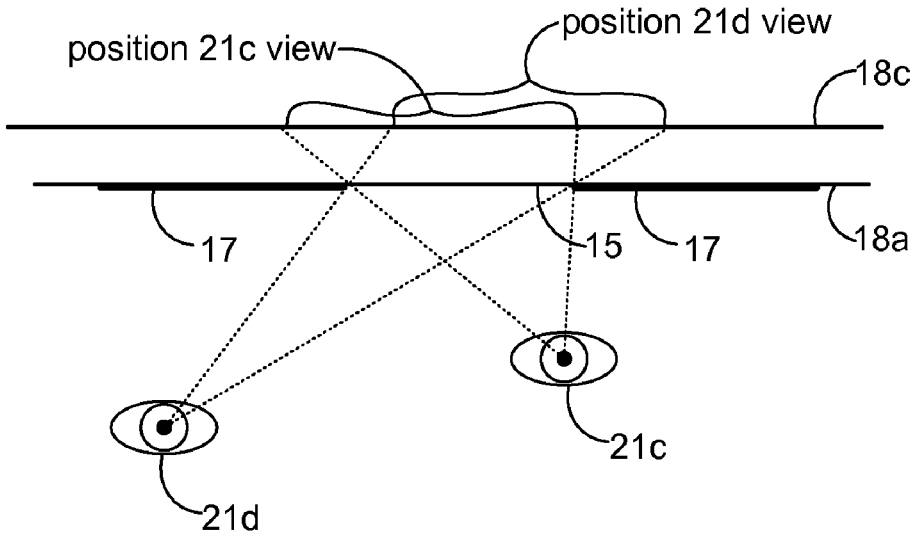

Figure 1B