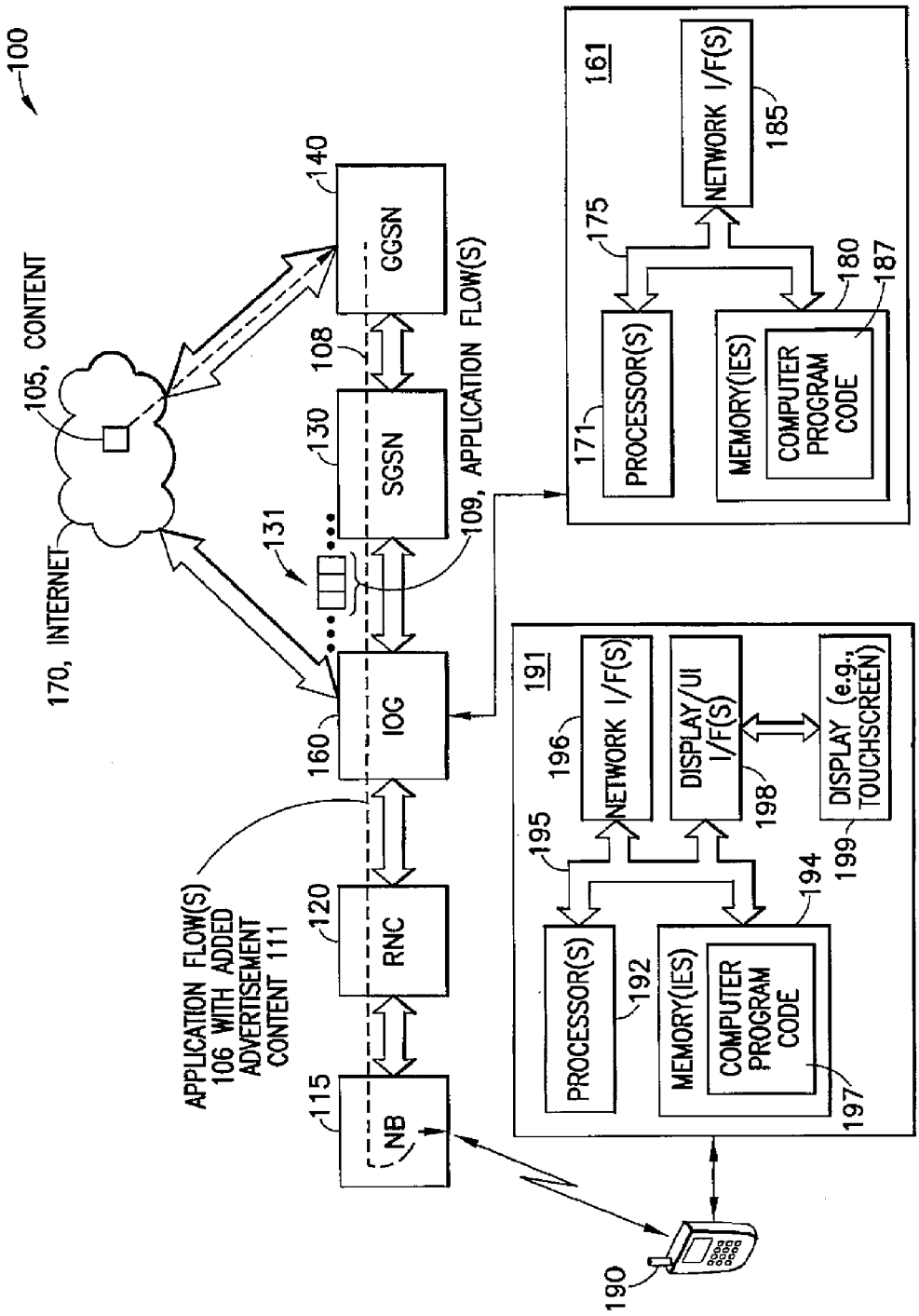
100
105, CONTENT
170, INTERNET
140
GGSN
108
130
SGSN
131
109, APPLICATION FLOW(S)
160
IOG
APPLICATION FLOW(S) 106 WITH ADDED ADVERTISEMENT CONTENT 111
120
RNC
115
NB
190
161
NETWORK I/F(S)
185
175
180
187
171
PROCESSOR(S)
MEMORY(IES)
COMPUTER PROGRAM CODE
191
196
NETWORK I/F(S)
DISPLAY/UI I/F(S)
198
DISPLAY (e.g., TOUCHSCREEN)
199
195
194
192
PROCESSOR(S)
MEMORY(IES)
COMPUTER PROGRAM CODE
197

FIG. 1