US 20170083047A1

(19) United States

(12) Patent Application Publication

(10) Pub. No.: US 2017/0083047 A1

(43) Pub. Date: Mar. 23, 2017

HÉLOT et al.

(54) **DISPLAY DEVICE FOR A MOTOR VEHICLE, METHOD FOR OPERATING A DISPLAY DEVICE, AND MOTOR VEHICLE HAVING A DISPLAY DEVICE**

(71) Applicant: **AUDI AG**, Ingolstadt (DE)

(72) Inventors: **Jacques HÉLOT**, Ingolstadt (DE); **Sandro WEIGELT**, Lenting (DE); **Immo REDEKER**, Ingolstadt (DE); **Ulrich HACKENBERG**, Wettstetten (DE); **Roland MAYER**, Lenting (DE)

(73) Assignee: **AUDI AG**, Ingolstadt (DE)

(21) Appl. No.: **15/311,374**

(22) PCT Filed: **Oct. 6, 2015**

(86) PCT No.: **PCT/EP2015/001948**

§ 371 (c)(1),
(2) Date: **Nov. 15, 2016**

(30) **Foreign Application Priority Data**

Nov. 3, 2014 (DE) 10 2014 016 323.7

Publication Classification

(51) **Int. Cl.**

G06F 1/16	(2006.01)
H01L 27/32	(2006.01)
B60K 37/06	(2006.01)

(52) **U.S. Cl.**

CPC ***G06F 1/166*** (2013.01); ***B60K 37/06*** (2013.01); ***G06F 1/1652*** (2013.01); ***G06F 1/1643*** (2013.01); ***H01L 27/323*** (2013.01); *B60K 2350/405* (2013.01); *B60K 2350/925* (2013.01); *B60K 2350/352* (2013.01)

(57) **ABSTRACT**
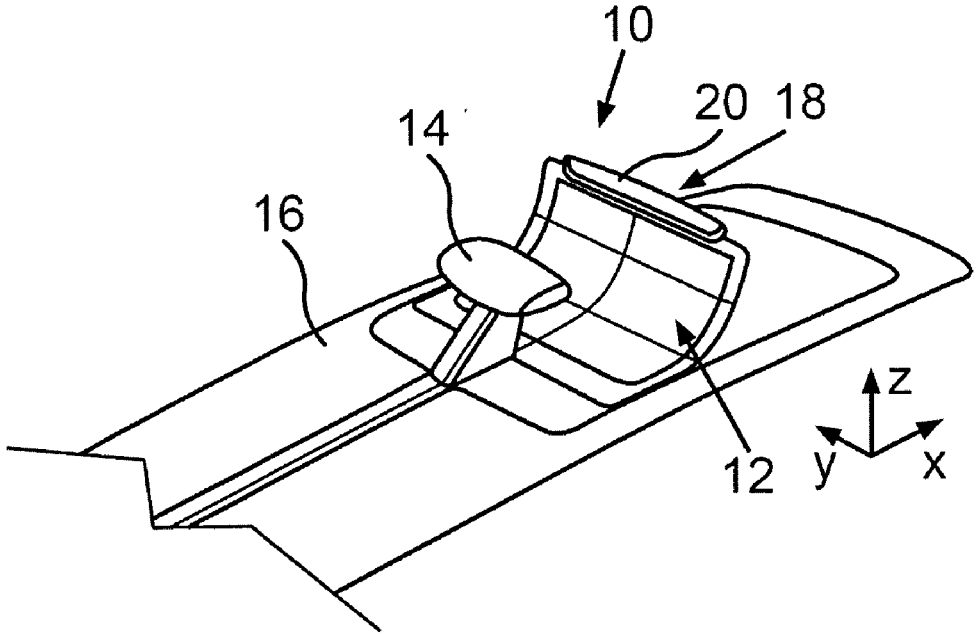
A flexible display apparatus and an adjusting apparatus which is designed to move the flexible display apparatus from a stowing position into a usage position are included in a display device for a motor vehicle. The adjusting apparatus is designed to bend the flexible display apparatus from the stowing position into the usage position.