US 20020128048A1

(19) United States

(12) Patent Application Publication

(10) Pub. No.: US 2002/0128048 A1

(43) Pub. Date: Sep. 12, 2002

Aaltonen et al.

(54) MOBILE PHONE FEATURING AUDIO-MODULATED VIBROTACTILE MODULE

(75) Inventors: **Olli Aaltonen**, Turku (FI); **Satu Jaaskelainen**, Piispanristi (FI); **Seppo Karjalainen**, Turku (FI); **Heikki Lang**, Kirjala (FI); **Heikki Hamalainen**, Turku (FI); **Stina Ojala**, Nousiainen (FI); **Terho Kaikuranta**, Piispanristi (FI)

Correspondence Address:
WARE FRESSOLA VAN DER SLUYS & ADOLPHSON, LLP
BRADFORD GREEN BUILDING 5
755 MAIN STREET, P O BOX 224
MONROE, CT 06468 (US)

(73) Assignee: **Nokia Mobile Phones Ltd.**, Espoo (FI)

(21) Appl. No.: **09/804,486**

(22) Filed: **Mar. 12, 2001**

Publication Classification

(51) **Int. Cl.**[7] **H04M 1/00**

(52) **U.S. Cl.** **455/567**; 455/550

(57) **ABSTRACT**
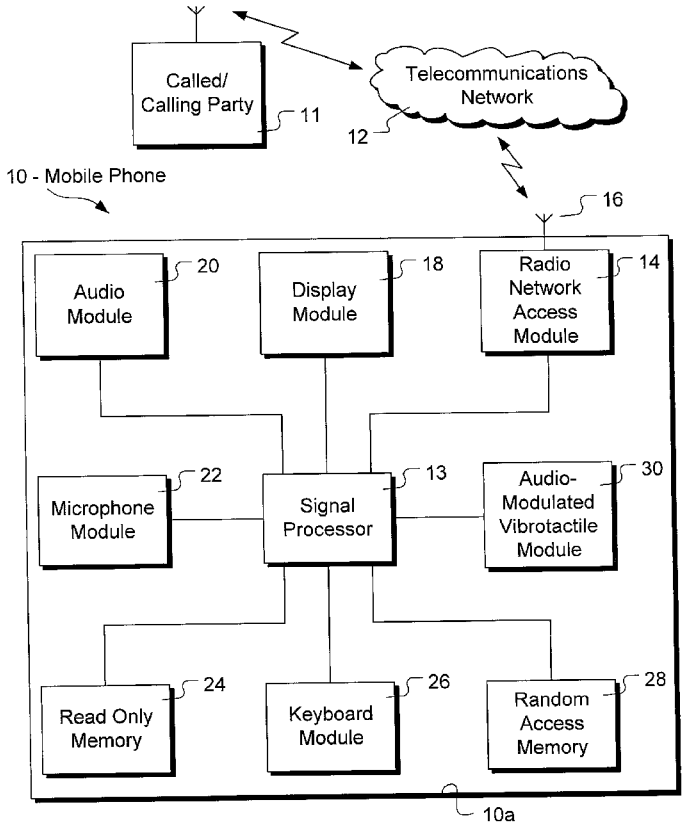
A telecommunications network includes a mobile phone with an audio-modulated vibrotactile module that responds to a telecommunications signal containing information about incoming speech from a called/calling party, for providing an audio-modulated vibrotactile module force containing information about the incoming speech from the called/calling party to vibrate a user's fingers, facial skin, wrist, cheek or other suitable location. The audio-modulated vibrotactile module has an audio-to-vibrotactile converter that responds to the telecommunications signal, for providing an audio-to-vibrotactile converter signal containing information about a vibration modulation of the incoming speech from the called/calling party. The audio-modulated vibrotactile module also has a vibrotactile actuator that responds to the audio-to-vibrotactile converter signal, for providing the audio-modulated vibrotactile module force in the form of a vibrotactile actuator force. The telecommunications system may also have the audio-to-vibrotactile converter. The vibrotactile actuator may be an electromechanical actuator arranged in the housing of the mobile phone for providing vibration to a user's fingers wrist or facial skin.